Numerical Simulation of Thermal Flow Model Under Fluid Mechanics

Xiaonan Dong and Yingbin Song

Wuhan Technology and Business University, Wuhan 430065, hubei, China

Abstract. The internal flow field of vertical water vapor waste heat boiler was studied by numerical simulation. In this project, the RNGk-ε turbulent flow model and Lagrange stochastic trajectory model is used to numerically simulate the gas-solid flow in a direct pressure water vapor waste heat boiler. The influence of the inlet shape, flow rate and outlet clearance of cooling water on the flow and heat transfer performance of cooling water in the cooler was analysed. It is found that the use of three inlet design can improve the water side cooling efficiency, and make the flow rate and temperature distribution in the cooling chamber more uniform. The optimal cooling water volume is 200 tons/hour in the current 2-stage cooling inlet pipe type.

Key words: Waste heat boiler; turbulent flow; gas-solid two-phase flow; fluid mechanics; heat flow model.

1. Introduction

The use of waste incineration technology to treat the highly toxic and refractory waste water produced in chemical industry, metallurgy and papermaking can effectively reduce its toxicity and environmental impact. However, fly ash particles are formed by the release and transformation of non-combustible inorganic materials in the waste water during combustion. These fly ash particles will be carried by high temperature flue gas, enter the waste heat recovery pipeline, and precipitate on the heat transfer surface, resulting in ash accumulation and corrosion, thus affecting the heat transfer effect. The continuous accumulation of ash can "bridge" in the narrow place of heat transfer pipe and flue, resulting in flue obstruction and shutdown, and bring greater unsafe risks to the production of the device. Vertical water vapor waste heat boiler is a kind of effective waste heat technology device used to deal with industrial waste heat in coal industry [1]. In the traditional steelmaking process, the water vapor temperature of the Under furnace reaches 1000 degrees Celsius, and the waste heat loss is 50 kg standard coal per ton of coke, if calculated according to 500 million tons of coke per year, the energy consumption is about 25 million tons. Due to the high temperature of water vapor, large pulsation and high smoke content, the content of CO and H_2 can reach more than 70% and is in positive pressure operation, so it needs to be effectively recycled to improve its energy conversion efficiency. The gas-solid flow characteristic in the furnace is an important factor to determine the safe and efficient operation of waste heat boiler. In order to further improve the operation efficiency and safety performance of waste heat boiler, the current research on the operation mechanism of waste heat boiler mainly focuses on its theoretical simulation and experimental verification [2]. Some scholars have analysed the characteristics of gas-solid two-phase flow under different particle sizes. Some scholars have studied the characteristics of waste heat boiler and provided some practical suggestions for its further application. Some scholars have calculated the heating area of waste heat boiler. The results show that when the flue gas flow speed is 7-12 m/s, the ash formation can be effectively prevented, and the heat transfer is also beneficial. This project takes a new type of industrial fire tube waste heat boiler as the object, systematically carries out the experimental and theoretical analysis of the flow and heat transfer characteristics in the wall cooling chamber. The flow and heat transfer characteristics of the inner wall of the wall cooling chamber are revealed, and the interaction mechanism between the walls in the wall cooling chamber is revealed, which provides a theoretical basis for the design of the wall cooling chamber.

2. Research object and grid division

The tubeplate cooling chamber of high temperature fire-tube waste heat boiler mainly uses forced circulation of boiler water to cool and protect the synthetic gas pipe and its flexible tubeplate at the inlet of the boiler [3]. Its structure is shown in FIG. 1(the picture is quoted in Energies 2018, 11(4), 796). Its main components include upper tubeplate, lower tubeplate, water inlet pipe, etc. Synthetic air pipe and central blowdown pipe. The high temperature synthetic gas is expelled by the lower temperature synthetic gas through the higher temperature synthetic gas. Because the tube plate under the cooling chamber is in direct contact with the high-temperature synthesis gas from the reformer, the temperature is the highest and the working conditions are the most severe [4]. Therefore, it is necessary to ensure the cooling of the lower tube plate and its joint with the composite pipe. The cryogenic cooling water first flows into the cold chamber of the tube plate from the cooling water inlet at the end of the water inlet pipe, and then drains from the annular gap between the upper and lower two pipes and counterflows along the syngas flow.

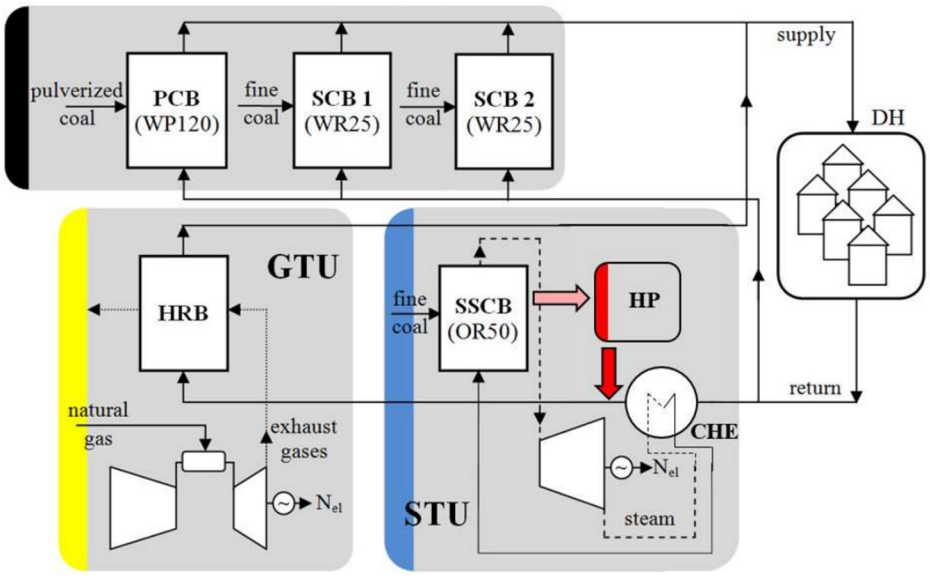

Figure 1. Layout diagram of waste heat boiler and piping system

3. Model and calculation method

The application of RNGk-ε turbulence model in waste heat boiler is studied in this paper.
(1) Continuity equation:

$$\frac{\partial s_i}{\partial x_i} = -\nabla(\lambda S) \tag{1}$$

(2) Momentum equation:

$$s_j \frac{\partial s_i}{\partial x_i} = g_i - \frac{1}{\lambda} \frac{\partial q \partial [C_i (\frac{\frac{\partial s_i}{\partial x_j} + \frac{\partial s_j}{\partial x_j}}{\frac{\partial s_i}{\partial x_j} - \frac{\partial s_j}{\partial x_j}})]}{\partial x_i \partial x_j} \tag{2}$$

(3) Turbulent kinetic energy equation:

$$\frac{\partial}{\partial t}(\lambda h)+\frac{\partial}{\partial x_i}(\lambda h s_i)= \frac{\partial\left(\delta_h \xi_{cgg}\frac{\partial h}{\partial x_j}\right)}{\partial x_j}+\frac{F_H+F_b}{F_H-F_b}-\lambda\varphi-L_M+D_h \tag{3}$$

(4) Equation of turbulent kinetic energy dissipation rate:

$$\frac{\partial}{\partial t}(\lambda\varphi)+\frac{\partial}{\partial x_i}(\lambda\varphi s_i)= \frac{\partial(\delta_\varphi \xi_{cgg}\frac{\partial\varphi}{\partial x_j})}{\partial x_j}+E_{1\varphi}\frac{\varphi(F_h+E_{3\varphi}F_b)}{H}-F_{2\varphi}\lambda\frac{\varphi^2}{h}-R_\varphi+D_\varphi \tag{4}$$

$E_{1\varphi}=1.42, E_{2\varphi}=1.68, E_{3\varphi}=0$. λ is the density of the liquid, kg/m^3. P is the pressure, Pa. v is the coefficient of motion viscosity, m^2/s. h is turbulent kinetic energy, m^2/s^2. ξ_{cgg} is the effective viscosity, $Pa\cdot s$. φ is the turbulent dissipation rate, m^2/s^3. F_h is the turbulent kinetic energy generated by the mean velocity gradient, m^2/s^2. F_b is the turbulent kinetic energy generated by buoyancy, m^2/s^2. L_M is the wave generated by diffusion in compressible turbulent transitions, constant. δ_h, δ_φ is the turbulent Prandtl number of the h equation and the e equation, without dimensionality. D_h, D_φ is a custom source entry [5]. For high-temperature water gas, the component transport model is adopted, and the components of water gas are shown in Table 1.

Table 1. Composition table of high temperature flue gas %

$w(CO_2)$	$w(CO)$	$w(H_2O)$	$w(O_2)$	$w(N_2)$	$w(N_2)$	$w(CH_4)$
19.06	27.81	17.40	0.42	4.79	32.08	2.60

For the solid phase flow in the furnace, the Lagrange random orbit model is used to simulate the discrete particles, and the governing equation is

$$\frac{d\xi_q}{dt}=G_D(\xi-\xi_q)+\frac{g_x(\lambda_q-\lambda)}{\lambda_q}+G_x \tag{5}$$

$G_D(\xi-\xi_q)$ is the drag force per unit mass of the particle. G_x includes thermal swimming force, Brown force and Saffman lift force. ξ_q is particle velocity, m/s. s is the fluid velocity, m/s. λ_q is the particle density, g/m^3. λ is the fluid density, kg/m^3. For the wear condition of particle impact heating surface, Edwards wear calculation model is selected, and the wear rate is defined as

$$R=\sum_{i=1}^{n}\frac{m_q E(dq)g(a)\xi_q^{b(\xi_q)}}{A_g} \tag{6}$$

Where: $E(dq)$ is the particle diameter function. a is the incidence Angle of particle trajectory impacting surface, $(\circ)$. $g(a)$ is the impact Angle function. ξ_q is the particle velocity, m/s. A_g is the projected area of the particle on the impact surface, and m^2. For particle size, Rosin-Rammler distribution is used to fit. The particle property parameters are shown in Table 2.

Table 2. Particulate property parameters

Total flow rate/kg·s^{-1}	Minimum particle size/mm	Maximum particle size/mm	Average particle size/mm
1.33	0.00	0.10	0.34

4. Example verification

However, it is difficult to sample and detect in actual production, and the risk is greater [6]. To this end, we use the experimental results obtained by Professor Guo Qinghua on the simulation test bench of small-scale mobile bed gasifier to test the model. A set of experimental equipment for turbulent heat transfer in the lower section of vaporizer is designed. A diagram of the test equipment with a sampling section for test testing is shown in Figure 2 (image cited in Concentrating solar assisted biomass-to-fuel conversion through gasification: A review). FIG. 3 is a numerical simulation of the model (image cited in Supercritical Water Heat Transfer in a Vertical Bare Tube). The calculated gas axial temperature field is basically consistent with the measured values, which verifies the correctness of the method.

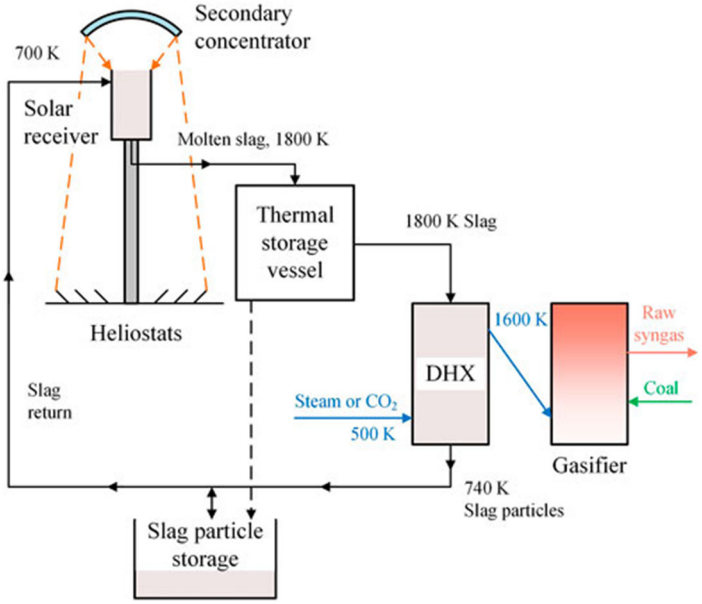

Figure 2. Schematic diagram of gasifier experimental device

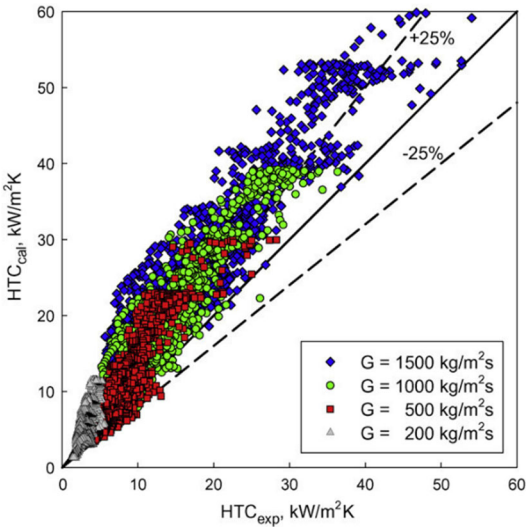

Figure 3. Comparison of simulated temperature distribution in the straight barrel section of gasifier with experimental results

5. Results and discussion

In a tube-plate cooler, the shape of the cooling water inlet plays an important role in the fluid flow in the tube-plate cooler and the cooling condition of the integrated trachea [7]. This paper focuses on the study of the flow field of tube-plate cooling chamber with 1~3 rows of 3 rows each under the same water-cooled water pipe layout. Figure 4 shows the changes of the flow field and temperature field in the tube sheet cavity under three inlet modes.

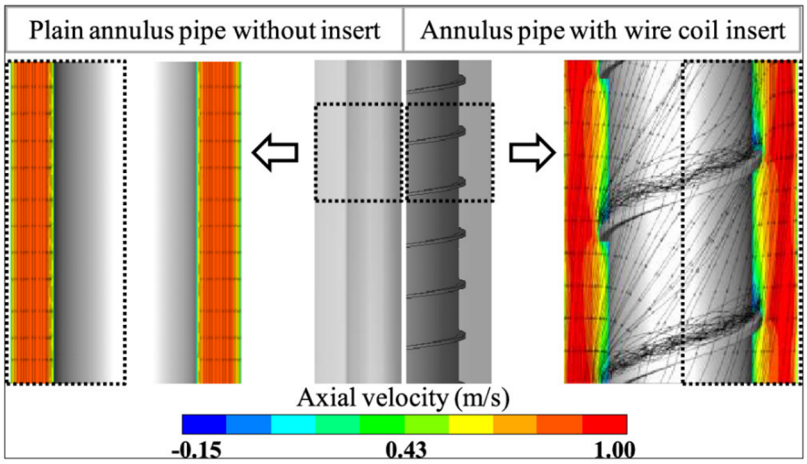

Figure 4. Velocity and temperature distribution in the tube plate cold chamber

On the whole, there is a vortex phenomenon in the cooling chamber of the three types of inlets. case1 is created by spraying cooling water between two cooling pipes. The formation of Case2 is caused by the ejection of cooling water and the collision with refracted water. Due to the collision-reflection action in Case3, the two nozzles form a two-symmetric vortex. From the point of view of temperature, Case1 is because the cooling water flows from the gap in the air pipe to the centre of the air pipe, so the temperature of the air pipe is relatively low, and it is relatively high from the room to the centre [8]. On the outside of Aikido, there is obvious high temperature. Colliding - refracted air flows through the outside of the synthesizer in Case2, giving the outside of the synthesizer a better cooling effect. Since the above two different flow patterns appear in Case3, the distribution of temperature and flow rate in the overall freezing chamber of Case3 is relatively balanced. The results show that the discharge temperature of mixed gas under the three feeding methods has little difference, which is about 1553 K. The cooling effect of the gas mixture is only about 20 K.

Because the high temperature area in the cooling room mainly exists near the synthetic gas pipe, the cooling effect of this area is more important. Figure 5 shows the temperature and flow profile at the water side of the composite tube wall on the central section of the cooler chamber in three cases [9]. It can be seen that the three air intake methods are not good for the internal cooling effect of syngas. Due to the wide distribution range and high average temperature of Case2 in the high temperate zone, its maximum temperature has approached the saturation point of circulating water under this condition, resulting in a high possibility of partial boiling evaporation of circulating water. The peak temperature and average temperature of Case1 are lower than that of Case3, but the flow field and distribution of Case3 are more consistent.

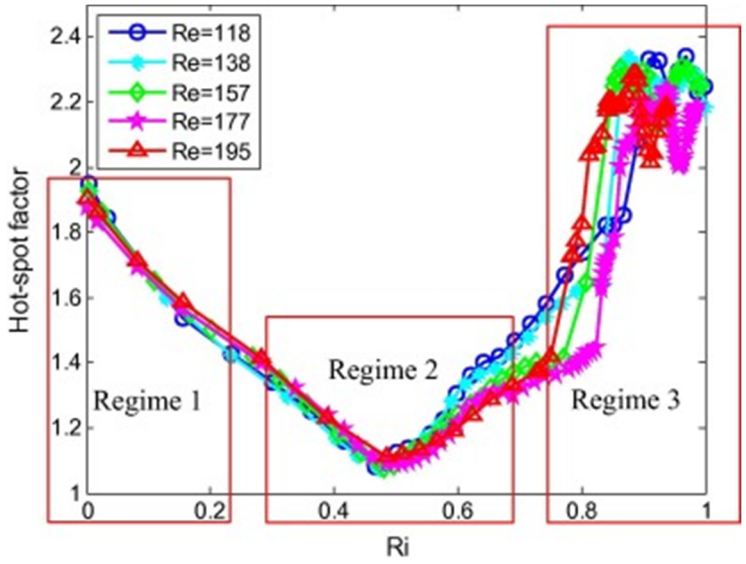

Figure 5. Temperature distribution of synthetic trachea wall under different inlet forms

6. Conclusion

In this paper, the flow and heat transfer process in tube plate cooling chamber of high temperature fire tube waste heat boiler is studied by numerical simulation method. The influence of factors such as inlet shape, flow rate and outlet clearance of cooling water on the flow field and heat transfer characteristics in the cooling water chamber was studied, and the protective effect of corundum bushing on the end of the synthetic duct was studied. Among the three types of syngas inlet, the inner cooling effect of synthetic gas pipe is relatively weak. The 1 intake type has insufficient cooling effect on the outside of the synthesizer, and the 2-intake type has a high cooling effect on the internal wall of the synthesizer. At the type 3 water inlet, the temperature of the water side wall of the synthetic pipe is relatively low, and the flow speed in the outlet gap of the cooling pipe is also relatively average. No. 3 water inlet is a better choice.

References

[1] Yang Qiwen, Zhang Wei, Li Xiaojun, et al. Numerical simulation and flow characteristic analysis of heat sensitive fluid cavitation. Journal of Drainage and Irrigation Machinery Engineering, 39(7) (2021)72-77.

[2] CAI Wei-Hua, Wei Zheng-Sheng, Li Shi-Lei, et al. Numerical simulation of single-phase flow and heat transfer characteristics in 5×5 petal-shaped fuel rod bundle assembly. Atomic Energy Science and Technology, 55(1) (2021)1939-1949.

[3] Wu Jiafeng, LIU Zhichun, Liu Wei. Numerical simulation and optimal design of heat transfer and flow characteristics of louver fin tubes. Journal of Engineering Thermophysics, 42(7) (2020)68-74.

[4] What should Dao Guo Chaoshen Yi Yan be governing the country. Numerical simulation of smoke flow characteristics in large multi-function tunnel fire. Modern Tunnel Technology, 58(1) (2021)536-540.

[5] Wang Hao, Luo Zhongyang, Fang Mengxiang, WANG Qinhui, CEN Jianmeng. Numerical simulation of gas-solid flow characteristics in a polygeneration bubbling fluidized bed. Thermal Power generation, 51(8) (2022)116-123.

[6] Zhao Rui, Sang Linxiang, Chen Lunjun, et al. Vertical well assisted SAGD expansion and geomechanics-thermal production coupling numerical simulation. Special Oil and Gas Reservoirs, 28(3) (2022)81-86.

[7] He Xiaoqiu, Xiong Yongliang, Peng Zerui, et al. Numerical simulation of heat convection energy dissipation and boundary layer characteristics of rotating soap bubbles. Acta Physica Sinica, 71(2) (2022)190-199.

[8] Jiang Junze, Yong Qiwei, Qian Haibing, et al. Research progress of phase interface detection and numerical simulation in gas-liquid two-phase pipes. Journal of Southwest Petroleum University, 43(2) (2021)138-148.

[9] Shan Kaixuan, Shen Boxiong, Luo Jiangze, et al. Numerical simulation of flow deposition characteristics of particulate matter in sampling tube. Journal of Hebei University of Technology, 52(2) (2021)98-102.