Turnip planting whole process integrated machine

Tao Sun [*, #], Xingyuan Fan [#], Mingzhu Liu [#], Bo Quan [#]

School of Mechanical and Electrical Engineering, Lanzhou University of Technology, Lan zhou China, 730050

* Corresponding author: a885253198@163.com

[#]These authors contributed equally.

Abstract. Radish, which is rich in carbohydrates and inorganic salts such as phosphorus and iron, is a common food for people. With the development of variety innovation, cultivation methods and transportation industry, the demand for radish has risen steadily, and the current national planting area has reached 20 million mu. In order to continuously implement the "14th Five-Year Plan", promote the modernization of agriculture and rural development, and improve productivity while liberating farmers' hands, radish planting and laminating machine came into being. Its soil loosening mechanism easily realizes the pre-treatment of the land. The benign seeds were then drilled to reduce the error of uneven dissemination. At the same time, the irrelevant fertilization mechanism ensures the nutritional supply of crops, grasps the planting time, and frees the hands of farmers. After planting, the soil return mechanism to improve the ridge soil paving and other follow-up. Finally, the film laminating mechanism is combined with the film pressing wheel to finish the operation of film laminating. Compared with traditional planting, the turnip planting mulching machine has many characteristics, such as significantly increasing germination rate, greatly shortening construction period, and significantly reducing cost.

Keywords: Agricultural machinery, Equipment design, Finite element analysis.

1. Introduction

Although the vegetable industry has always been one of the industries in the planting industry with more independent input from farmers, high economic benefits and rapid development, there are still many practical problems such as lack of high-quality varieties of vegetables, low intelligence of production machinery, urgent improvement of food safety and relatively inadequate follow-up treatment. According to the National Academy of Agricultural Sciences, compared with traditional artificial planting, automatic vegetable transplanter can achieve seedlings, seedlings, ditching, planting, soil cover, compaction in one step, a machine can complete 4-5 people's workload [1], can save a lot of labor costs, it can be seen that mechanical automation has a positive incentive for agricultural development cannot be ignored.

As one of the world's largest agricultural countries with a long history, the development of agricultural mechanization is bound to bring huge productivity to agricultural production, greatly reduce labor intensity, ensure agricultural hours, to achieve the purpose of increasing production and stable production. In November 2021, The State Council clearly pointed out that the work of "agriculture, rural areas and farmers" is the top priority in comprehensively building a modern socialist country, and in order to implement the "14th Five-Year Plan for National Economic and Social Development of the People's Republic of China and the Outline of the 2035 Vision Goals", adhere to the priority of agricultural and rural development, comprehensively promote rural revitalization, and accelerate agricultural and rural modernization. Therefore, more and more attention has been paid to agricultural development, and agricultural production tends to be large-scale and efficient.

Foreign research on sowing machinery is earlier, among which some countries in Europe and the United States have a higher level of fruit mechanization and relatively mature technology. The first sowing robot is made by the United States, on this basis, many countries such as Japan, the Netherlands, France have also developed various kinds of sowing robots, such as Japan's tomato sowing robot, the Netherlands' cucumber planting robot, as well as apple, grape and other sowing robots. In the mid-1940s, the United States successfully developed a vibration seeder for sowing walnuts and ginkgo

biloba, such seeder is simple and convenient to use, high efficiency, so in the 1950s has been vigorously developed; In the 1960s, pneumatic planters and inertial vibration planters appeared. After a long period of development, the level of foreign mechanical planting has reached a certain height. At present, the vegetables with large mechanical planting amount are Chinese cabbage, spinach, rape, etc., and the mechanical planting methods mainly include dredging, covering and transplanting.

The mechanization development of foreign agriculture has also promoted the flourishing of China's agricultural machinery, after the continuous efforts of predecessors, China has developed a mechanical vibration hawthorn seed picking machine based on the principle of vibration, air bag picker and handheld electric picker, but such machines due to low sowing efficiency also failed to promote in the city. Generally speaking, for the research of sowing robot, our country is still in the primary stage. At present, the research on radish planting and sowing has not been deeply studied at home and abroad, so the mechanical automation of radish planting operation will play a great role in promoting the agricultural mechanization in our country.

Due to the complex and changeable working environment of robots and often uncertain factors, the current radish sowing robot is not perfect, which mainly has many problems, such as too heavy robot sowing, slow sowing speed, production cost, high fruit loss rate, fuzzy recognition system and so on. Therefore, to reduce costs, improve efficiency, increase machine flexibility, reduce crop damage, with a keen recognition function is particularly critical. In China, some scholars have designed a sowing machine with a tractor as the power head, but it is still in the imagination and has not been made solid. In addition, in our country, radish planting operations are diverse in planting forms, planting scale differences and different land conditions, the use of tractors to provide power will bring great inconvenience, but also run counter to the concept of ecological environmental protection in the 21st century.

The market demand of radish planting is increasing, but the planting of radish planting has been restricting the development of radish planting industry. At present, China's vegetable and fruit planting operation mainly relies on artificial sowing, and can only ensure that farmers dig pits, sow, bury, fertilize and other continuous operations in order to ensure that the farming time is not wrong, highlighting the great labor intensity, sowing efficiency is extremely low many drawbacks, is a major problem in China's vegetable and fruit industry, and turnip planting is a typical one. Therefore, the research and development of radish planting operation seeder is imperative, and its help and influence on radish planting industry must be beyond doubt.

2. Radish planting and laminating machine mechanical scheme design

2.1. Overall scheme design of radish planting and laminating machine

Through the investigation and analysis of domestic and foreign data, we found that the problem of the traditional seeder is that it is difficult to achieve the coordination of the ditcher and the cut disc, which often leads to too much resistance of the cut disc, or the ditcher hangs straw, resulting in blockage.

After experimental observation and analysis of the traditional mechanical structure, we adopted the following method to improve the soil surface to loosen and consolidate the soil first, which can reduce the difficulties of planting operations to a certain extent, and also facilitate the later mulching operations. Using the method of borehole seeding to burrow radish seeds can reduce the occurrence of uneven seed distribution. At the same time, the sowing operation and fertilization operation are carried out independently, which can avoid the occurrence of accidents in the planting process. The parallelogram mechanism is adopted in the operation of soil return, and the movement trajectory is easy to determine and the operation is simple. When all the operations are completed, the laminating mechanism carries out continuous operation and completes the laminating work with the film pressing wheel. Since the manufacturing cost of this scheme is not high, it can also meet the current conditions, so this scheme is adopted.

Car body power system, because the car body is mainly used for farm operations, the land is mostly pothole surface, so the wheel design needs to be large enough, wide enough, with enough grasping area, to ensure the smooth movement of the car body, in order to adapt to the soft land, the weight of the car body needs to be controlled to prevent the car body from collapsing due to gravity; The design of the car body needs to be designed according to the growth environment and characteristics of the radish, and the planting of the car body is double row seeding. In addition, we also install a detection device on the planting car, so that farmers can better understand the specific situation of the land.

While meeting the above work requirements, we can also make our mechanical mechanism more compact. It is relatively easy to meet the requirements of our planting tasks. At present, the mechanical system of the whole planting process integrated machine mainly includes parts, namely, soil loosening system, fertilization system, seeding system, soil return system, film mulching system, transmission system and power system. The following will be a summary of the design of each part.

2.2. Turnip planting whole process integrated machine mechanical unit scheme

The mechanical unit mainly includes five parts: soil loosening mechanism, fertilization mechanism, seeding mechanism, soil return mechanism and film mulching mechanism. The design of mechanical structure should be combined with the existing device, with the help of computer-aided design software and three-dimensional modeling, modeling analysis of each component and simulation assembly, and then judge the design rationality.

2.2.1. Design scheme of soil loosening mechanism

The soil loosening mechanism is mainly composed of plough and rake plate wheel and ridging roller, and the auxiliary part is mainly bearing, belt wheel, motor and so on. The transmission mechanism of the soil thinning part is mainly transformed through the synchronous belt wheel. Since the belt wheel is connected to the drive shaft through the pin, the motor drives the synchronous belt wheel to rotate, and then prompts the plow and rake sheet wheel to rotate and loosen the soil [2]. Considering the use of battery energy supply, new materials and simplified structure can be used in design to reduce self-weight. According to the development of 2CM4B traction potato planter by Li Jiandong et al. [3], cone is used to compact the loosened soil.

The following is the formula for calculating the synchronous pulley transmission ratio:

$$z = \frac{z_2}{z_1} \tag{1}$$

Where, z2 is the number of driving wheel teeth, z1 is the number of driven wheel teeth

Figure 1 below shows the soil loosening mechanism:

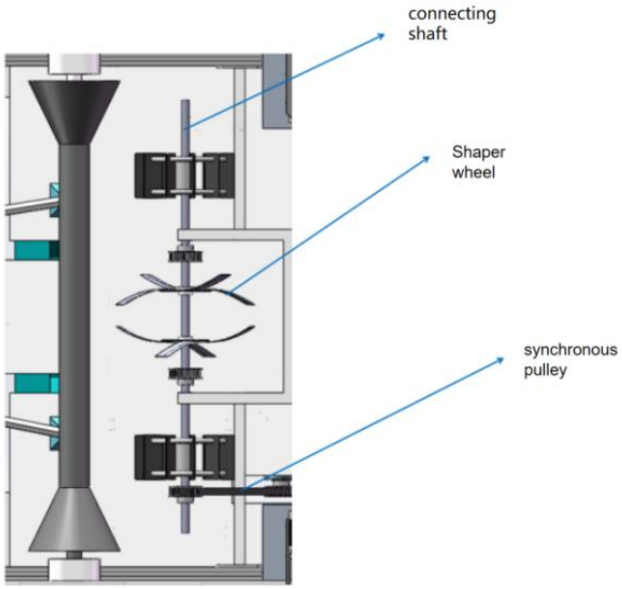

Figure 1. Soil loosening mechanism

2.2.2. Design scheme of seeding mechanism

The sowing mechanism is mainly used for sowing during the operation, and the fertilization mechanism is cooperated with the operation. The designed sowing mechanism mainly includes seed box, seed storage tank, seed transport pipeline, seed drop pipeline, lead screw, coupling, drill, motor and other parts. During the operation, the motor first drives the lead screw, so that the drill is lowered to the appropriate height, and the motor of the drill begins to work and drill. After grooving and digging, the main control table of the planter advances through the control car to align the seed pipe with the hole. After the seeds fall into the seed storage tank through the seed delivery pipeline by the seed box, the number of seeds falling is accurately controlled by the sensor control in the seed storage tank.

Since the planter achieves two rows of seeding, the seeding efficiency can be improved. In addition, according to the growth habit of radish, the planter reasonably designed the spacing between the two drill bits, the drilling depth, the spacing between the plants and so on. The planter adopts many complex sensing and control structures to solve the problems of precise seed fall and trolley drive control.

Figure 2 below shows the seeding mechanism:

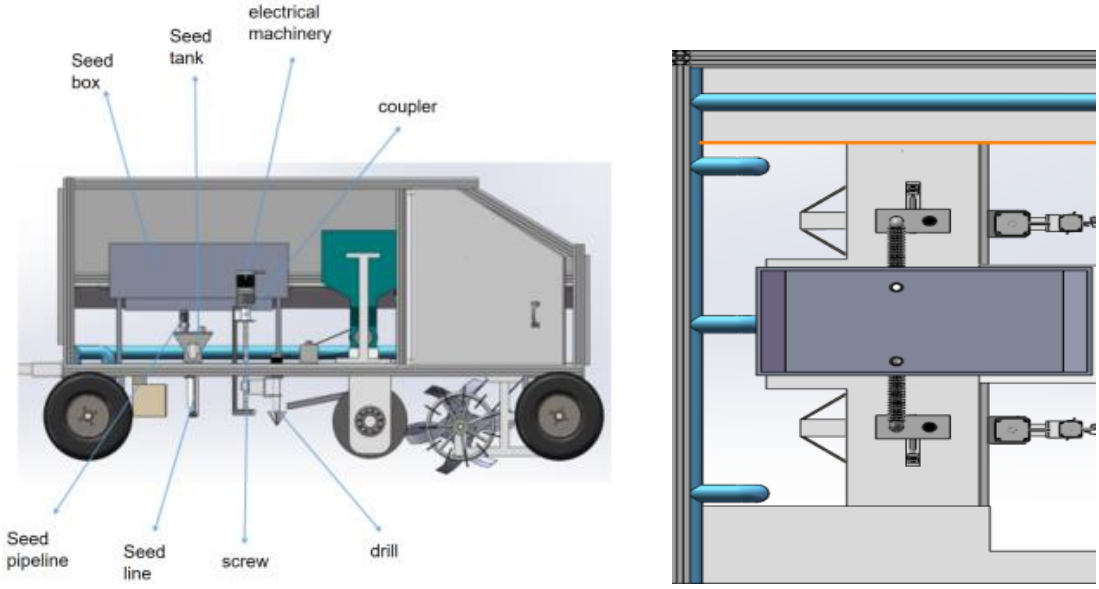

Figure 2. Seeding mechanism

2.2.3. Fertilization mechanism design scheme

Fertilization refers to the application of nutrients to crops before sowing or during growth to assist crop production. In the traditional sense of fertilization, farmers use containers to spread waste components around crops, as shown in Figure 3. On the one hand, this method increases farmers' labor intensity; on the other hand, it is difficult to control the amount of fertilization, and a small amount will reduce the nutritional effect. Too much will bring "excess nutrition" to the production of the crops themselves, which is counterproductive.



Figure 3. Schematic diagram of traditional fertilization operation

The fertilization mechanism mainly includes fertilizer storage box, synchronous belt wheel, fertilizer pipe, motor, connecting shaft, fertilizer wheel and other parts. In the fertilization part, the design and experiment of the micro-electric fertilizer spreader by Chen Liqing et al. [4] was considered. When the sowing part was completed, there would be holes in the ground, and then the motor would be connected to the synchronous belt wheel, which would drive the fertilizer wheel to work, the fertilizer gate would be opened, and the fertilizer would enter the hole along the fertilizing pipe. The fertilization mechanism can spread the fertilizer at a fixed point to reduce waste: and because the motor in the fertilization mechanism is controlled by the signal of the main console, it can accurately start and close, reducing unnecessary energy waste.

The endurance of the planter can be improved. Figure 4 below shows the fertilization mechanism:

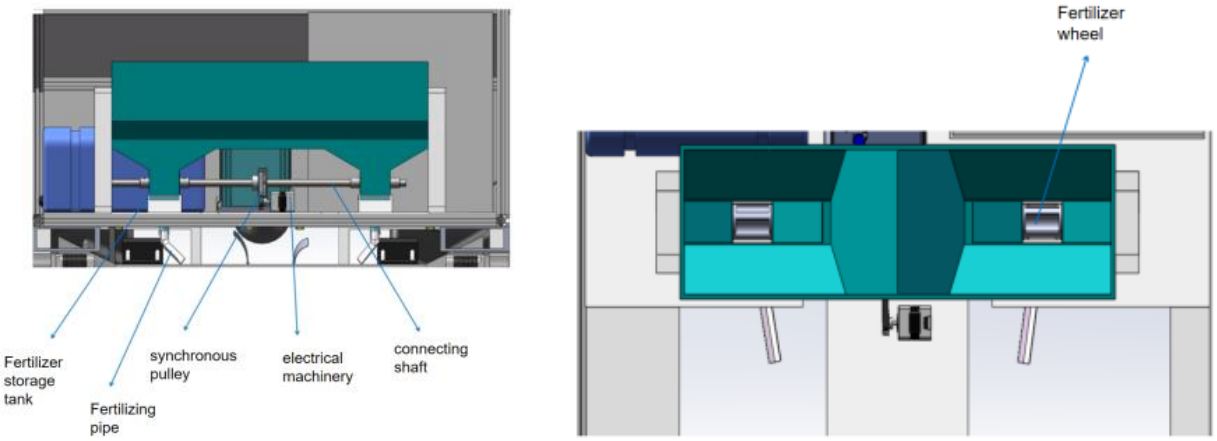

Figure 4. Fertilization mechanism

2.2.4. Soil return mechanism design scheme

The soil return mechanism adopts a double safety mechanism, which is the parallelogram mechanism and the soil return sheet. The parallelogram mechanism uses a motor to drive the return arm, so that the return arm can carry out reciprocating movement and realize the return function. The soil return sheet uses the power of the car moving forward to push the residual soil back into the hole to ensure the effect of soil return.

Figure 5 below shows the soil return mechanism:

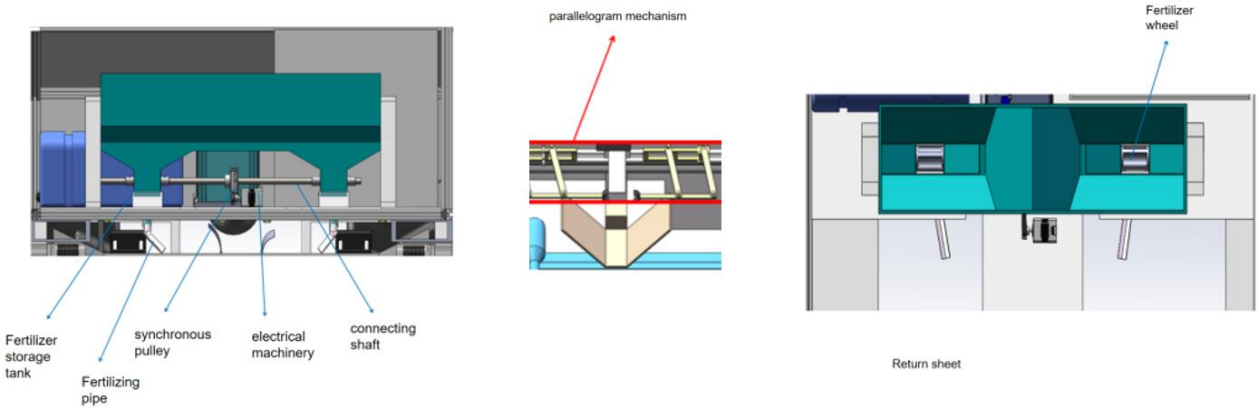

Figure 5. soil return mechanism

2.2.5. Irrigation mechanism design scheme

According to the development of the key technical equipment of the intelligent water and fertilizer machine control system by Han Weihua et al. [5], the irrigation mechanism adopts sensing technology and automation technology. When the machine completes the operation of soil opening, sowing, fertilizing and returning to the soil, the hydraulic pump pumps the water in the water tank into the pipeline, and the water in the water tank can be accurately scattered into the pit through the sensing device.

Figure 6 below shows the irrigation mechanism:

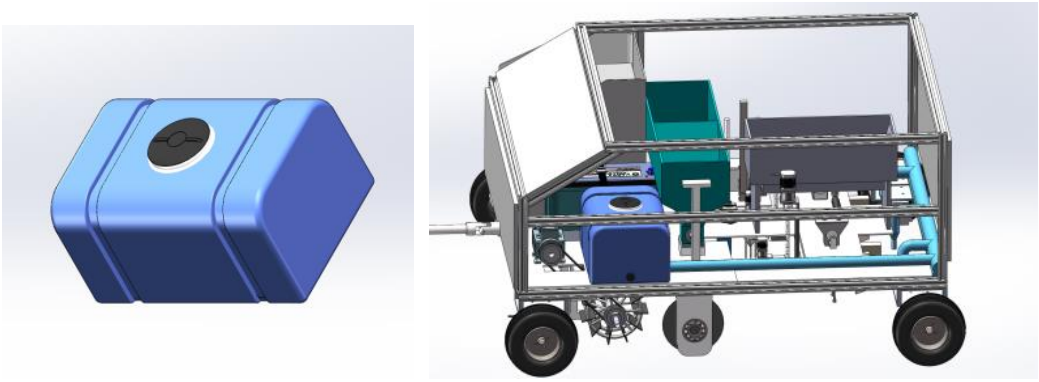

Figure 6. Irrigation mechanism

2.2.6. Design scheme of film covering mechanism

Mulching mechanism is the last process of the whole planting, after the completion of the whole process of sowing, it is necessary to carry out mulching operation to ensure that the seeds are in the appropriate temperature and humidity fast germination production. The film coating operation mainly includes four parts: film rolling, film coating, earth pressing and cutting. The film coating mechanism designed includes film rolling drum, flattening device, earth pressing wheel, lead screw, slide rail and so on. The film covering mechanism is shown in Figure 7 below:

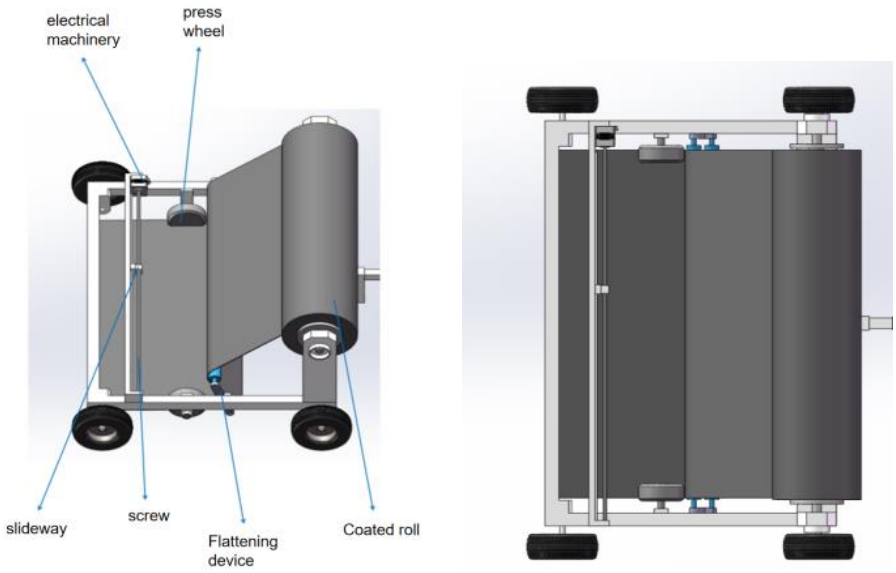

Figure 7. Laminating mechanism

2.2.7. Lifting system design scheme

The lifting system is operated as an auxiliary device of the whole system, and its role is to adjust the height of the base of the planter from the ground to meet the requirements of various land conditions. The lifting system in this project mainly uses direct-acting electric push rod to achieve its functions. The electric push rod, also known as linear driver, is a new linear actuator composed of motor push rod and control device and other mechanisms (Figure 8), which can be considered as an extension of the rotating motor in terms of structure.

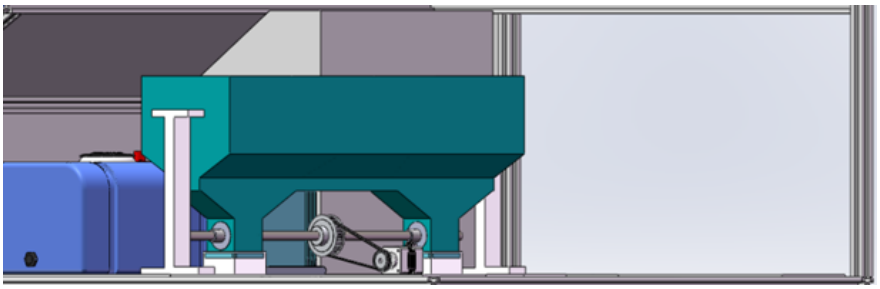

Figure 8. Direct acting electric push rod

2.2.8. Overall design of turnip planting and laminating machine

At this point, the mechanical design has been completed, and the designed radish planting and laminating machine is shown in Figure 9. In addition to the three main working parts mentioned above, the machine also includes the shell, the bearing mechanism and other auxiliary devices, the shell adopts the overall enveloping design, the bearing mechanism mainly includes the body, the frame and other parts, used to load the frame of each component, the overall mechanism is shown in Figure 10.



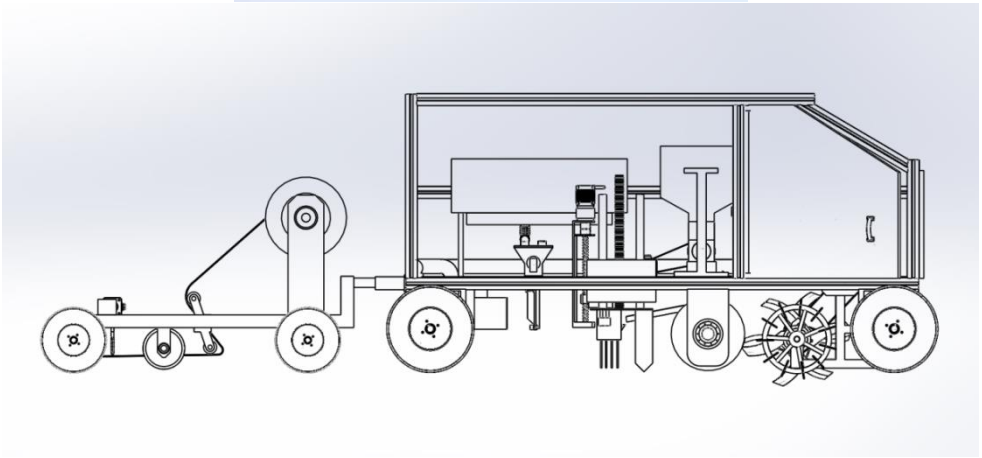

Figure 9. radish plant laminating machine

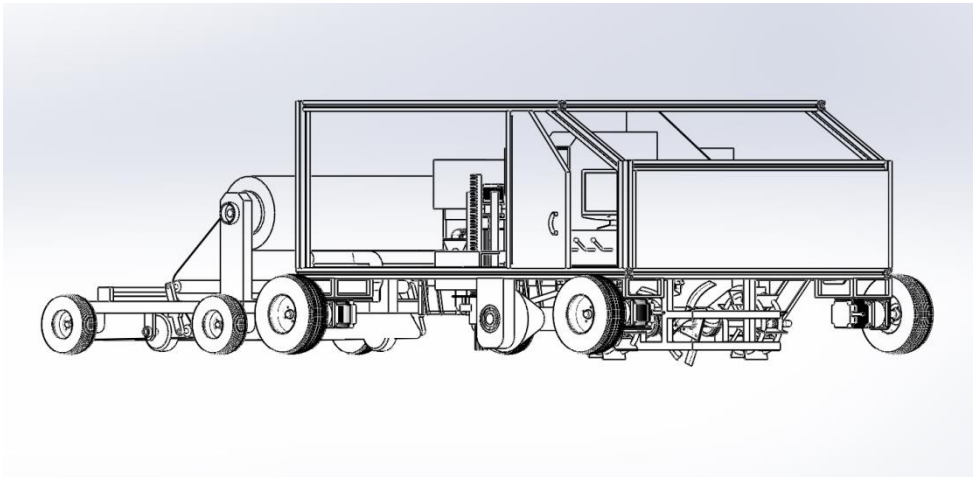

Figure 10. radish plant laminating machine overall design

3. Finite element analysis

In this study, stress checks were carried out on parts that bear heavy loads, including plow and harrow cutter, return shovel, drill and lead screw. By using the finite element analysis software ANSYS, a three-dimensional model of plow and rake cutter, ridging roller, return shovel, drill and lead screw was established based on the bionic radish planting and mulching machine, taking into account the influence of soil resistance. The mechanical stress analysis was carried out on them, and their deformation and stress distribution cloud maps were obtained respectively.

3.1. Establishment of finite element model

The tool structure of the plow and harrow is a four-fan model, the middle tool holder is connected with the fixed shaft, and the warping direction of the two adjacent blades is different, which is

convenient to improve the soil turning efficiency. The upper end of the return shovel is fixed in the car body through the support rod, and the lower end is a trapezoidal shape (upper bottom and two isosceles) as the idea of design of metal sheet, and the two ends are open at a certain Angle, which is convenient to gather the surrounding soil to fill the pit; The working end of the drill has a conical structure, and four convex structures are evenly distributed on the surface, which is easy to transfer the drill to the soil and improve the working efficiency. As a transmission part, the lead screw is a part that cannot be ignored. One end of the lead screw is connected to the motor, which is driven by the motor. The bit holder for fixing the bit is installed on the lead screw to realize the up and down movement of the bit. The material used is mainly 45 steel (Tables 1 and 2).

Table 1. Parameters of temperature and humidity friction coefficient firmness

Argument	Calculate the temperature / °C	Relative humidity R	Friction coefficient ft	Firmness /MPa
soil	8	70%	0.7~0.8	700

Table 2. Material performance parameters

Materials	Elastic modulus /MPa	Poisson's ratio	Allowable stress /MPa
45 steel	196-206	0.24-0.28	120MPa

3.2. Mechanical model

Considering the simplification of plow and rake tool model, the blade part is simplified. In addition, considering the efficiency of the software, the model assumption and simplification of the plow and rake tool are made.

1) For the welded parts between the parts directly against each other, the default is binding contact.

2) The calculation of buckling force by Ansys finite element software is carried out on the basis of static stress analysis, so the static stress analysis is carried out first in the actual analysis and calculation, and then the buckling analysis.

3.3. Establishment of finite element model

The core problem and difficulty of finite element stress analysis of mechanism is to establish a reasonable analysis model. In the past finite element analysis of the structure, due to the limitation of computer hardware and software, the processing and calculation results of the boundary conditions of the simplified model cannot reflect the real distribution of the stress of the bar, and the analysis results will bring some errors. The machine adopts 3D solid model to simulate the complex real structure, load and boundary conditions of the bar.

3.4. Model selection and optimization

The stress cloud diagram of the drill is shown in Figure. 11, the stress cloud diagram of the drive screw is shown in Figure. 12, the stress cloud diagram of the return sheet is shown in Figure. 13, and the stress cloud diagram of the loose sheet is shown in Figure. 14.

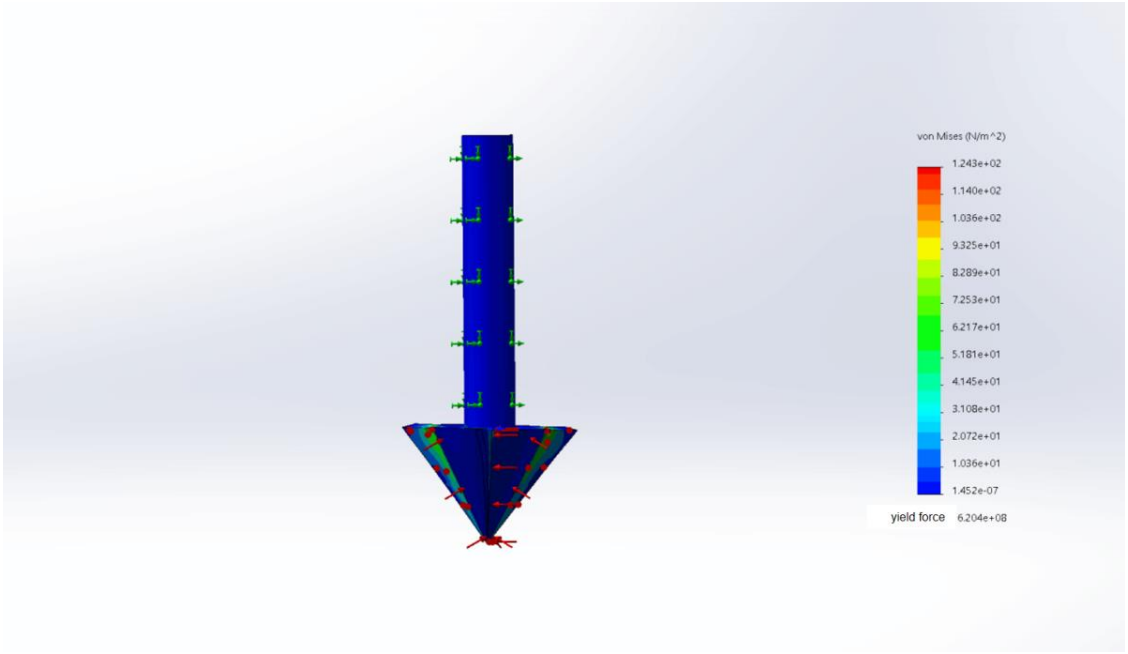

Figure 11. Stress cloud diagram of the drill bit

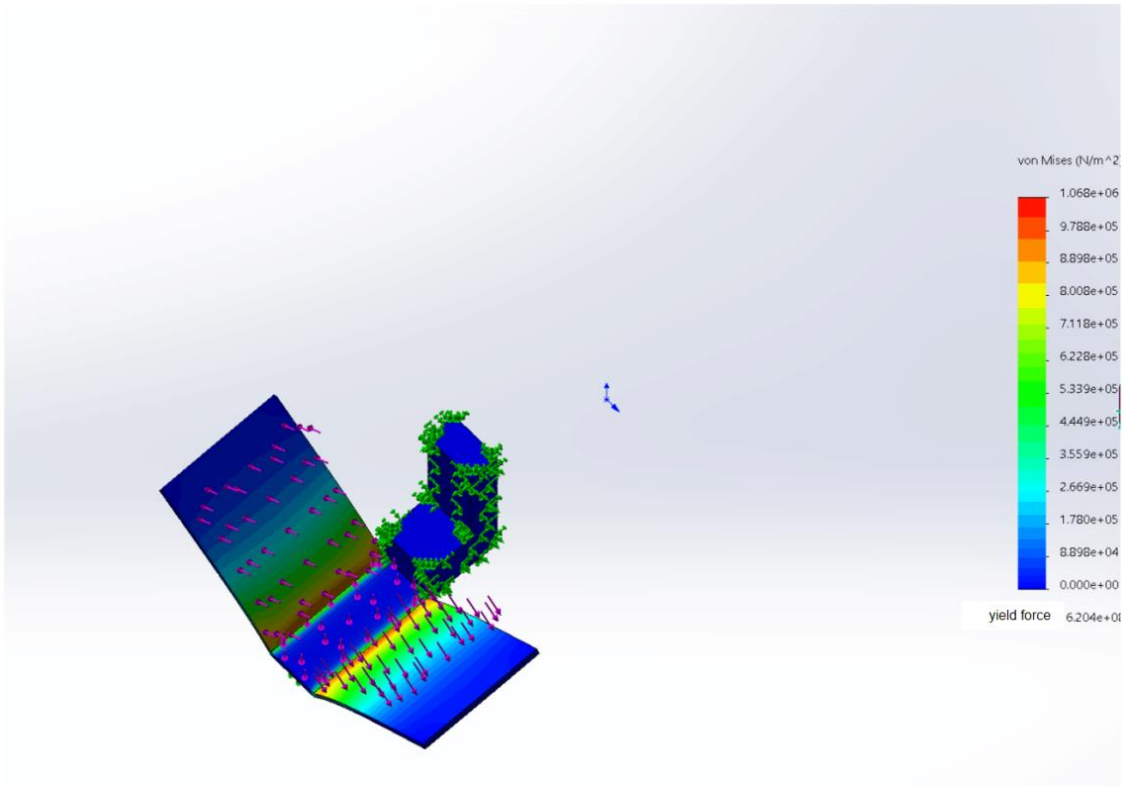

Figure 12. Stress cloud diagram of driving screw

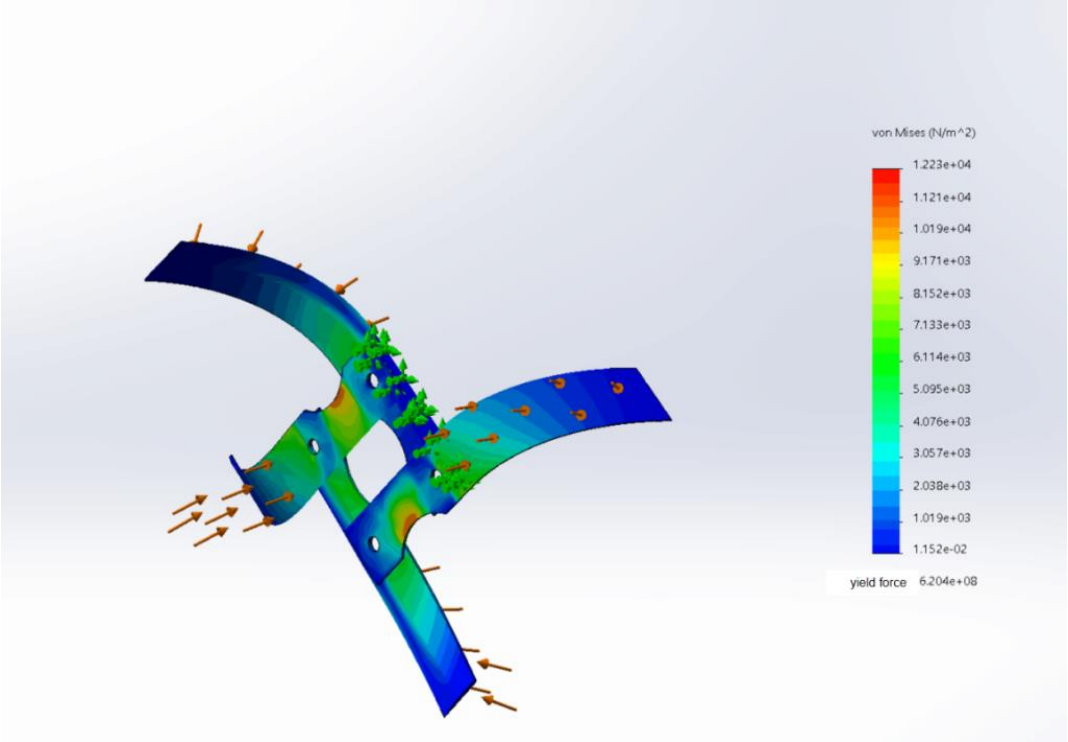

Figure 13. Stress cloud diagram of the back soil sheet

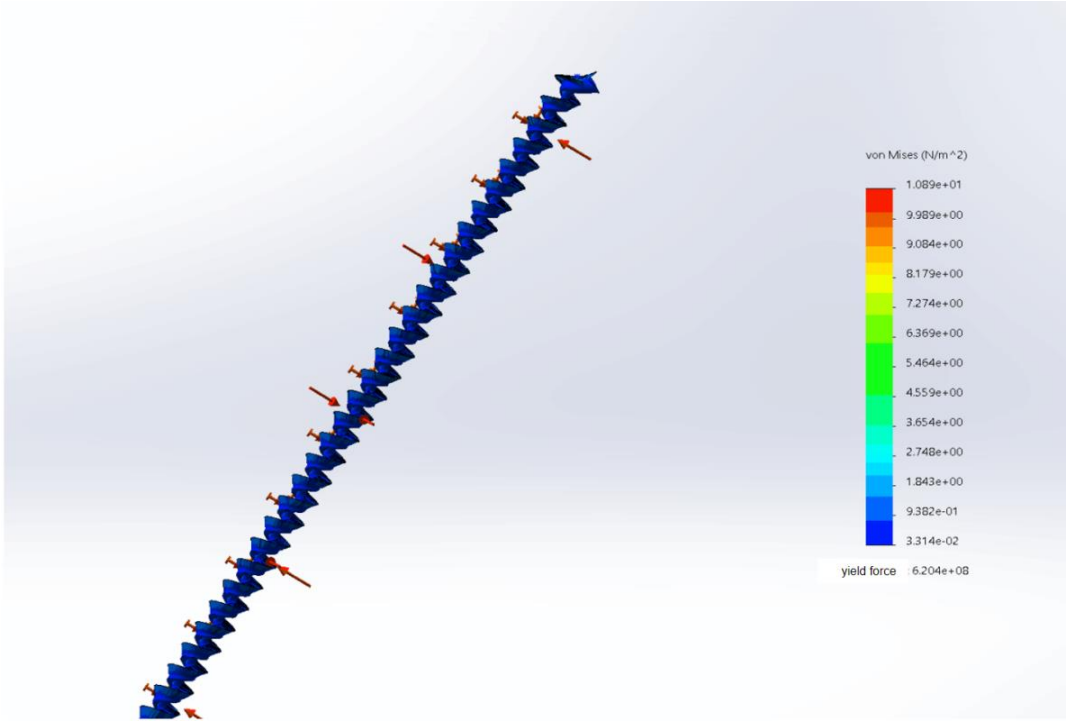

Figure 14. Stress cloud map of soil sheet

3.5. Results of finite element analysis

According to Liu Yu et al. [6] based on the discrete element and multi-body dynamics theory, the blade of the soil ripper can withstand a larger torque, and the deeper the soil is, the more stable the torque will be. In the actual use process, the soil ripper can be inserted into deeper soil, which can greatly improve the work efficiency. The drill pipe has less force and the drill bit bears more force, but because the drill depth required for radish planting is shallow, the drill bit suffers less damage and can complete the specified task. Lead screw drive Because the selected motor power is small, so the lead

screw transmission torque is small, and the lead screw made of 45 steels can meet the transmission needs [7-10].

4. Conclusion

The all-in-one turnip planting machine integrates the operation of soil loosening, planting, fertilization, irrigation and film mulching in the traditional agricultural operation process, and uses sensing technology and automation technology to achieve control and regulation of the overall system. In order to cope with sudden changes in the agricultural production process, The whole process of radish planting machine is also equipped with chassis lifting system, GPS positioning system, video transmission module, etc., and the finite element analysis method is used to check the stress of the key components to meet the working requirements.

References

[1] LI Jianfang, Gong Liqiang, Zhu Guanyang et al. Vegetable planting machinery selection and comparison test between mechanization and artificial planting [J]. Modern Agricultural Machinery, 2015, (02): 7 - 9.

[2] Cao Zhonghua, Feng Wei, Zhang Xianfeng et al. Research on Key Technology of shed electric micro-cultivator [J]. Hubei Agricultural Mechanization, 2020, (08): 141 - 142.

[3] LI J D, ZHAO J Y, XUE F Q, et al. Development of 2CM4B traction potato planter [J]. Agricultural Mechanization Research, 2011, 33 (06): 45 - 48.

[4] Chen Liqing, Chen Yu, Zheng Yuanyuan et al. Design and Experiment of Miniature Electric Fertilizer Applicator [J]. Machine Design, 2013, 30 (08): 78 - 82.

[5] HAN W H. Development of Key Technical equipment for Control System of intelligent water and fertilizer Machine [J]. Journal of Agricultural Engineering, 2021, 11 (03): 20 - 24. (in Chinese).

[6] Liu Yu, Liu Yuping, Zhang Tuo. Load analysis of Rotary tilling tool shaft of Micro-cultivator based on discrete element and multi-body dynamics [J]. China Journal of Agricultural Science and Technology, 2019, 22 (11): 79 - 86.

[7] Anamarija B, James T E, Ruben G, et al. Genetic basis of Arabidopsis thaliana responses to infection by naïve and adapted isolates of turnip mosaic virus [J]. eLife, 2024, 12.

[8] Veronika G, Mirta M M, Dora Z, et al. Carotenoid degradation rate in milled grain of dent maize hybrids and its relationship with the grain physicochemical properties [J]. Food Research International, 2024, 177113909-.

[9] Shiyu L, Yingying Z, Xiyu H, et al. High internal phase Pickering emulsions stabilized by the complexes of ultrasound-treated pea protein isolate/mung bean starch for delivery of β-carotene [J]. Food Chemistry, 2024, 440138201-.

[10] Amiri A T, Sedigheh A, Mohsen R, et al.Effect of nanocomposite alginate-based edible coatings containing thymol-nanoemulsion and/or thymol-loaded nanostructured lipid carriers on the microbial and physicochemical properties of carrot. [J]. International journal of biological macromolecules, 2024, 129196 - 129196.