Advancements and Integration of CMOS Phase Detectors in Modern Communication Systems and Imaging Technologies

Jinchen Yao*

School of automotive engineering, Jilin University, Changchun, Jilin Province, China

* Corresponding Author Email: yaojc1522@mails.jlu.edu.cn

Abstract. CMOS phase detectors play a crucial role in generating high-precision clocks, synchronizing data communication, and enabling autofocus systems in imaging. These devices can measure and adjust the phase of signals with remarkable accuracy, thereby ensuring signal stability and optimizing system performance. With the increasing complexity of communication systems, designers have focused on developing phase detectors capable of handling various communication standards and modes. This article will first explore the recent advancements in CMOS phase detector designs. It will then investigate the innovative approaches to integrating CMOS phase detectors with other components. Lastly, it will showcase the novel applications of CMOS phase detectors in Phase-Locked Loops (PLLs). The research presented in this article is expected to contribute significantly to the study and application of CMOS phase detectors in the fields of communication systems and integrated circuits, providing valuable insights for future developments.

Keywords: CMOS phase detectors, Communication systems, Phase-Locked Loops, Integrated circuits

1. Introduction

The relentless advancement in consumer electronics, telecommunications, and data processing systems necessitates continuous improvement in the components that underpin their functionality. Among these, CMOS phase detectors are pivotal, primarily due to their role within Phase-Locked Loops (PLLs) which synchronize signals in myriad digital applications.

PLLs constitute a crucial electronic control mechanism, the primary function of which is to adjust the frequency and phase of an oscillator's output signal to align it with a reference signal. This attribute is critically important across numerous domains: it ensures frequency synchronization in wireless communications; generates precise clock signals in digital circuits, which is essential for the operation of critical components such as microprocessors; facilitates efficient modulation and demodulation of signals, particularly within Frequency Modulation (FM) technology; recovers clock signals in digital data transmission to guarantee stable data retrieval; and utilizes its filtering capabilities to suppress noise within the signal, thereby enhancing the performance of the overall system. Furthermore, PLLs are utilized for frequency synthesis, creating an array of precise frequencies for various applications and also support fine-tuning of frequencies to meet specific performance requirements. As a result, PLLs play an indispensable role in modern electronic and communication systems, with their capability for high-precision control enabling the realization and maintenance of complex electronic systems with high efficiency.

CMOS phase detectors have undergone a long history of development, and there are many kinds of detectors and filters developed on the basis of CMOS phase detectors. Engineers tasked with the design of these detectors must navigate a complex landscape, where the sensitivity, linearity, power consumption, and operational speed of these components must be finely balanced. Initially, designs incorporating XOR gates were adopted; despite their ease of integration, they presented inherent challenges, such as limited linear ranges and vulnerability to dead zones, as highlighted in seminal works [1,2].

Subsequent developments have yielded phase-frequency detectors (PFDs), a superior class of detectors recognized for their ability to address dead zones and enhance linearity. These PFDs detect phase differences and correct frequency discrepancies, a dual capability that has been explored in

depth [3]. Innovations aimed at minimizing PFD dead zones have led to significant improvements, particularly within the charge pump mechanism, an area of active enhancement [4].

The following content of this paper will elaborate on the innovation and development of CMOS phase detectors in recent years.

2. Design of CMOS phase detector

The recent trend towards incorporating analog-to-digital converters within CMOS phase detectors marks a notable shift towards a digitally-assisted phase detection methodology. This approach benefits from digital signal processing techniques, offering higher resolution and improved tolerance to process variations, a subject that has been extensively researched [5].

However, as CMOS technology progresses to deep-submicron geometries, it introduces a spectrum of non-idealities. These include increased leakage currents and diminished voltage headroom, which impose additional design challenges. The literature suggests various strategies to address these issues, such as the implementation of low-voltage techniques and error correction mechanisms, which have been proposed to mitigate the impact of these scaling-induced non-idealities [6].

Advancing further into nanometer-scale CMOS technology necessitates a holistic view of system integration. The co-localization of phase detectors with other system components on the same chip can potentially minimize noise and parasitic interactions, a critical consideration in high-speed communication systems. Yet, this integration brings forth layout and isolation complexities, driving the need for innovative circuit techniques and topologies [7].

In summation, the trajectory of CMOS phase detector design reflects a dynamic interplay between technological progress and the imperative for superior system performance.

3. Integration Progress of CMOS Phase Detectors

3.1. Current State of Integration between CMOS Technology and VCOs

Significant advancements have been made in the integration of CMOS technology with phase detectors and VCOs, especially within PLLs. Advanced CMOS processes enable these components to deliver higher performance and improved phase noise characteristics at smaller dimensions and lower power consumption. Designers can now integrate complex PD and VCO designs on single chips, facilitating rapid locking and broad bandwidth operation while maintaining compatibility with various wireless communication standards. These developments have significantly propelled the efficiency and functionality of microelectronic systems.

For instance, the research team led by D. Monda designed a radiation-hardened inductor-capacitor voltage-controlled oscillator (LC-VCO) for space and high-energy physics applications, intended for integration into PLLs and compliant with the SpaceFibre protocol [8]. Utilizing 65-nanometer CMOS technology, they achieved a tuning range of 5.4 to 6.8 GHz. The LC-VCO withstood X-ray radiation testing at a total ionizing dose of 1 Grad (silicon dioxide), exhibiting a frequency degradation of 2.54% and an increase in phase noise of 3.34%, as shown in Figure 1. The research optimised the LC-VCO's design and enhanced its reliability in extreme environments, providing a practical reference for communication systems in space and high-energy physics domains.

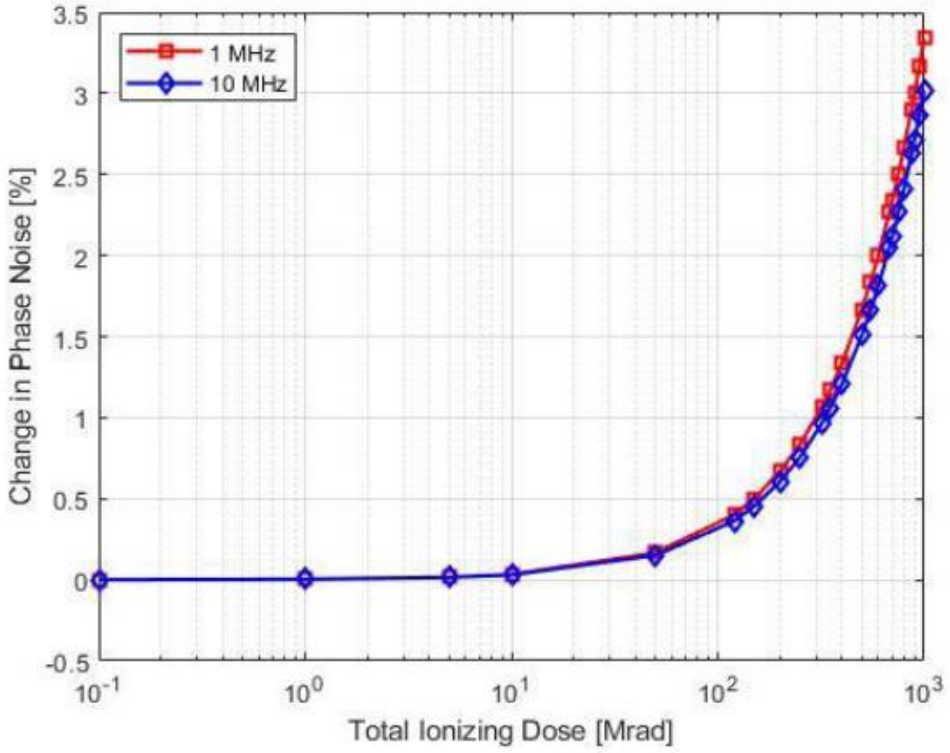

Figure 1. After exposure to 1 Grad SiO2 TID, VCO phase noise varied by 3.34% for 1 MHz (red) and 3% for 10 MHz (blue) frequency offsets at max TID. [8]

3.2. Progress in Integration of CMOS Phase Detectors with Dividers

Important strides have been taken in the integration of CMOS technology with phase detectors and dividers, leading to more efficient and compact phase-locked loop designs. These components are now achievable with smaller areas and lower power consumption while offering high precision and rapid response. As the process nodes continue to scale down, the integration of phase detectors and dividers has not only enhanced signal processing capabilities but also opened up new possibilities for multi-band and wideband operations, which are crucial for meeting the complex demands of modern communication systems.

For example, a study by M. Hietanen demonstrated designing and implementing a high-performance divide-by-2 divider circuit, supported by 22-nanometer CMOS FD-SOI technology [9]. Targeting the requirements of the millimeter-wave frequency band for 5G communication standards, the circuit utilized back gate biasing techniques to significantly extend the tuning range of the output center frequency, achieving an operational frequency range from 21.3 to 30 GHz at 0dBm input signal, which covers and exceeds the 24.25 to 27.5 GHz range within the 5G band. The circuit's power consumption is only 11mW at 0.86V, and its compact area of just 800 micrometers squared facilitates integration with modules such as IQ mixers, suitable for direct-conversion or heterodyne transmitters and receivers.

The schematic for the frequency divider in this study is depicted in Figure 2, featuring a pair of cascaded flip-flops with a feedback loop. Each flip-flop is comprised of four sections. Figure 3 below shows the frequency dividing core and the threshold voltage of M1-M4.

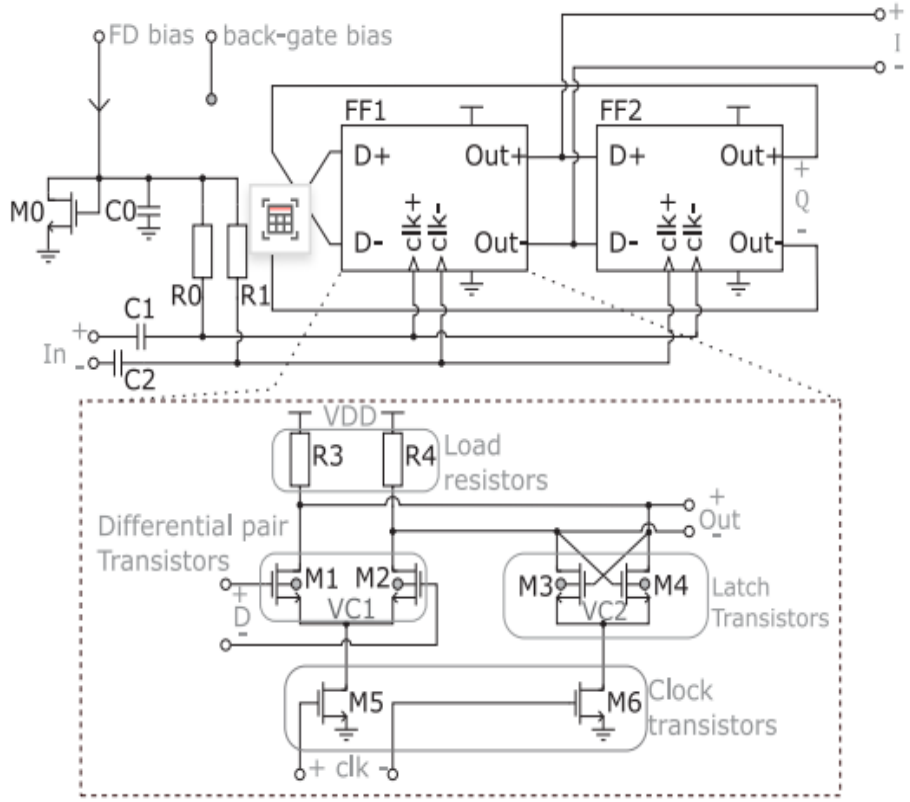

Figure 2. CML frequency divider circuit diagram presented without the input balun and output driver components. [9]

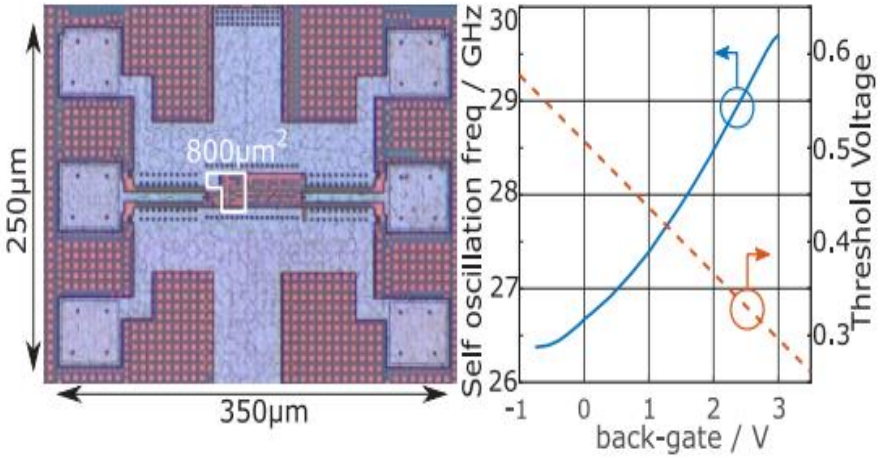

Figure 3. Micrograph of the frequency divider chip showcasing the divider core, along with empirical data on the back-bias influence on fso and theoretical threshold voltages for M1-M4. [9]

To address the issue of inductor structures occupying excessive space in traditional millimeter-wave circuits, the study employed an inductorless design approach, achieving smaller dimensions and better integration through current-mode logic dividers. During the design process, emphasis was placed on optimizing the time constants and gains of the output nodes to ensure the circuit's capability for self-oscillation. Moreover, the circuit included a differential transformer and a three-stage common-source driver to alleviate the load of the frequency divider and match a 50Ω output load.

Experimental measurements characterized the input power sensitivity curve of the divider with high-precision equipment on the chip, ensuring the accuracy and reliability of the circuit design. Overall, the divider circuit design of this study holds significant importance in the field of millimeter-wave integrated circuits, offering an effective technological solution for high-frequency, high-integration circuit design in 5G and future communication technologies.

3.3. Innovation in Integration of CMOS Phase Detectors with Filters

The integration of phase detectors and filters on CMOS processes facilitates more compact phase-locked loop (PLL) system designs. Leveraging the high precision and low cost of CMOS technology, designers have developed miniaturized and efficient filters and phase detectors. These components effectively remove phase noise, enhance system stability, and reduce the space required for analog components, thereby achieving more functions and higher performance in wireless communication and signal processing domains.

High-performance on-chip millimeter-wave broadband bandpass filters (BPF) are crucial for signal selectivity and interference suppression in microwave communication and radar systems. Z. Ge utilized a dual-layer design in CMOS technology to develop a novel on-chip millimeter-wave broadband BPF [10]. The main objective was to integrate efficient CMOS phase detectors and dividers to improve the filter's performance.

The research employed a dual-layer design strategy, where the top layer structure exhibited a high-pass filter response and the bottom layer, coupled with the top, generated an upper stopband, forming a compound quasi-elliptic broadband BPF. Adjusting the capacitance values in both layers allowed for tuning transmission zeros (TZs), which is crucial for achieving sharp rejections in the filter response. An equivalent lumped element circuit model was proposed, which is suitable for multi-stage BPF designs seeking higher selectivity. Figure 4 illustrates the equivalent lumped-element circuit model of a passive integrated millimeter-wave broadband bandpass filter (BPF) developed by researchers in this study, along with its application in a two-stage cascaded BPF design.

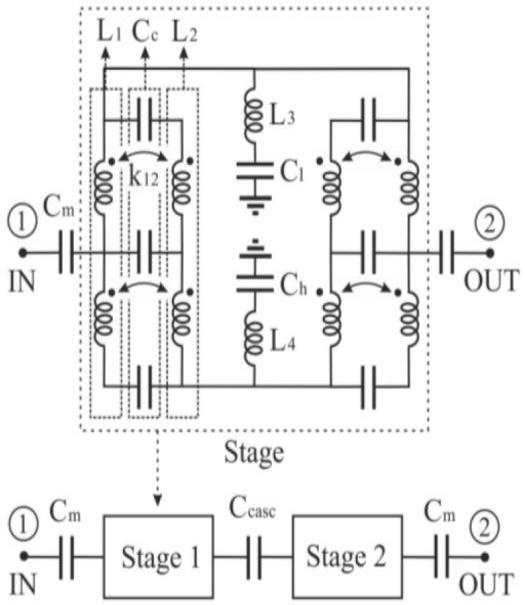

Figure 4. Equivalent lumped-element circuit representation for the integrated passive mm-wave broadband BPF, applied to a cascaded two-stage BPF design in series. [10]

An experimental design and fabrication of a prototype on-chip integrated single-stage broadband BPF were conducted, with a center frequency of 34.5 GHz and a 3 dB relative bandwidth of 61.2%, and its performance was characterized. The study results confirmed the design's effectiveness in enhancing filtering performance and achieving high-frequency signal processing. The filter featured wide bandwidth and high selectivity and tunable transmission zeros, meeting the stringent requirements of high-frequency integrated circuit design.

In totality, this research provides an innovative design approach in the field of on-chip millimeter-wave broadband filtering technology. It validates its application prospects in integrating CMOS phase detectors and dividers through experimentation. This holds significant theoretical and practical implications for the development of future, more complex, and higher-performance communication systems.

3.4. Impact of Increased Integration on Performance

In CMOS technology, an enhancement in integration density is observed to significantly affect performance across multiple dimensions. Initially, an escalation in processing speed is achieved due to shortened interconnects and reduced signal propagation delays. Subsequently, the inclusion of a greater number of transistors on a single chip is permitted, thereby augmenting functionality and facilitating more complex processing capabilities within the same footprint. This miniaturization also contributes to the reduction of power consumption; the smaller the transistor, the lesser the gate capacitance, and consequently, the lower the dynamic power consumption. Nevertheless, as transistors are reduced in size, leakage power emerges as a critical issue, necessitating innovative designs to mitigate its impact.

Furthermore, heightened integration density typically culminates in cost savings by allowing economies of scale and reducing the cost per function of the chip. The diminution in chip size aids in the miniaturization of electronic devices, rendering end-user products more sleek and portable.

However, this miniaturization introduces challenges in thermal management, as an increase in power density may lead to heightened thermal loads, demanding more sophisticated cooling solutions. The phenomena of hot carrier injection and bias temperature instability become more pronounced in reduced geometries, potentially impacting reliability. Finally, while digital circuits benefit from scaling, analog components confront challenges such as reduced voltage headroom and device mismatch, which may degrade their performance in high-density environments.

4. Applications of CMOS Phase Detectors in PLLs

CMOS phase detectors within PLLs primarily ascertain the phase discrepancy between the reference signal and the feedback signal, engendering a voltage or current signal proportional to said phase difference. This signal is subsequently employed to modulate the Voltage-Controlled Oscillator (VCO) frequency, thereby ensuring the VCO's output is synchronized with the phase and frequency of the reference signal. This mechanism is crucial across a multitude of electronic applications, including clock generation, signal synchronization, frequency synthesis, and clock recovery in data communication. The CMOS technology, renowned for its low power consumption and high levels of integration, renders the CMOS phase detectors exceedingly apt for high-performance and portable electronic systems that incorporate PLLs.

Research endeavors concerning CMOS phase detectors have witnessed continuous exploration of diverse PLL application schemes in recent years. For instance, N. Akhter and M. T. Amin have concentrated on the application of the CMOS Phase Frequency Detector (PFD) within Phase Locked Loops, examining an architecture capable of functioning at GHz frequencies [11]. Through the adoption of avant-garde design methodologies, a high-performance PFD with substantially reduced latency to the order of nanoseconds has been realized. The findings indicate that this architecture surpasses existing technologies in terms of performance, offering expedited response and higher operational frequencies. The outcomes of this study bear significant implications for enhancing the overall performance of CMOS PLL systems and contribute to technological advancements in high-speed communication and precision timing control.

In the realm of noise reduction, Tavakoli, J. has fashioned a low-power, low-jitter 1.2 GHz Integer-N Phase Locked Loop (INPLL), incorporating a novel high-gain sampling phase detector (PD), which has markedly augmented the phase detection gain [12]. This high-gain PD, along with the application of a transconductance (Gm) cell, has minimized the noise impact of both the PFD and the Charge Pump (CP), successfully achieving low power and low jitter even with a low-frequency reference clock. The research has also integrated an Auxiliary Frequency Lock Loop (AFLL) and a Lock Detector (LD), enhancing the frequency lock range and the capability to detect the locked state, thereby further reducing power consumption and jitter. The proposed INPLL, while maintaining a low jitter signal-to-noise ratio, has achieved a jitter figure of merit (FoMjitter) of -236 dB, making a notable contribution to the applications of CMOS phase detectors in PLLs.

5. Conclusion

In this review, the author extensively explores the design, evolution, and applications of CMOS phase detectors. The focus is placed on the advancements in the integration of CMOS phase detectors in recent years, including innovative integrations with VCOs, dividers, and filters. Researchers have maximized the integration of CMOS phase detectors with other components, enhancing sensitivity and precision while reducing size and power consumption. These advancements have expanded possibilities in communication systems and 5G technology. The review concludes with specific architectures proposed by researchers for the application of CMOS phase detectors in PLLs. These architectures have demonstrably improved the overall performance of CMOS-based PLL systems, broadening their application scope.

However, the author also recognizes that with the increasing energy efficiency demands of mobile and IoT devices, reducing the power consumption of CMOS phase detectors remains a key challenge, despite CMOS technology's significant advantages over other technologies, such as bipolar transistor technology, in terms of power efficiency. Additionally, the performance of CMOS phase detectors can be affected by manufacturing processes and temperature variations. Hence, a more robust design would be beneficial for handling such issues. Researchers are encouraged to conduct in-depth studies on power consumption and design challenges, taking into account the practical application scenarios of CMOS phase detectors to improve their utility and reliability.

Looking ahead, the author believes that CMOS phase detectors will continue to play a vital role in communications and integrated circuits. As communication systems evolve to higher standards with 5G and beyond, the demand for CMOS phase detectors in PLLs for frequency synthesis will increase, essential for achieving higher data transfer rates and multi-band connectivity. Moreover, in applications such as autonomous driving and precision agriculture, CMOS phase detectors will maintain their significance. The future development of CMOS phase detectors appears promising within the foreseeable horizon.

References

[1] Chen S, Peng YJ, Wang Xia, et al. A High DB-linear Wide Dynamic range CMOS variable gain amplifier [J]. Microelectronics, 2011, 41(6): 790-793.

[2] Kumar T B, Kar S K, Boolchandani D. A wide linear range CMOS OTA and its application in continuous-time filters[J]. Analog Integrated Circuits and Signal Processing, 2020, 103(2): 283-290.

[3] Divya M, Sundaram K. A novel blind zone free, low power phase frequency detector for fast locking of charge pump phase locked loops[C]//International Conference on Microelectronic Devices, Circuits and Systems. Cham: Springer Nature Switzerland, 2022: 117-128.

[4] Zhuang Jinqing, ** Kai Hang, Luo Xueqin. Design of low frequency charge pump PLL [J]. Modern Electronics Technique, 2014, 37(16).

[5] Gielen G G E, Hernandez L, Rombouts P. Time-encoding analog-to-digital converters: Bridging the analog gap to advanced digital cmos-part 1: Basic principles[J]. IEEE Solid-State Circuits Magazine, 2020, 12(2): 47-55.

[6] Kim S, Seok M. Variation-tolerant, ultra-low-voltage microprocessor with a low-overhead, within-a-cycle in-situ timing-error detection and correction technique[J]. IEEE Journal of Solid-State Circuits, 2015, 50(6): 1478-1490.

[7] Martins R P. Analog and Mixed-Signal CMOS Circuits: The emergence and leadership of a Lab, a reference Book and the future at the core of the A/D Interface in the IoE[C]//ESSCIRC 2023-IEEE 49th European Solid State Circuits Conference (ESSCIRC). IEEE, 2023: 465-468.

[8] Monda D, Ciarpi G, Saponara S. Design and Verification of a 6.25 GHz LC-Tank VCO integrated in 65 nm CMOS Technology Operating up to 1 Grad TID[J]. IEEE Transactions on Nuclear Science, 2021, 68(10): 2524-2532.

[9] Hietanen M, Aikio J, Akbar R, et al. A 28 GHz static CML frequency divider with back-gate tuning on 22-nm CMOS FD-SOI technology[C]//2019 IEEE 19th Topical Meeting on Silicon Monolithic Integrated Circuits in RF Systems (SiRF). IEEE, 2019: 1-3.

[10] Ge Z, Chen L, Gomez-Garcia R, et al. Millimeter-wave wide-band bandpass filter in CMOS technology using a two-layered highpass-type approach with embedded upper stopband[J]. IEEE Transactions on Circuits and Systems II: Express Briefs, 2021, 68(5): 1586-1590.

[11] Akhter N, Amin M T. An area efficient low power phase-frequency detector for pll applications[C]//2020 2nd International Conference on Advanced Information and Communication Technology (ICAICT). IEEE, 2020: 488-491.

[12] Tavakoli J, Lavasani H M, Sheikhaei S. An Ultra Low Power Integer-N PLL with a High-Gain Sampling Phase Detector for IOT Applications in 65 nm CMOS[J]. Journal of Low Power Electronics and Applications, 2023, 13(4): 65.