Research on the Design and Application of Flexible Electronic Wearable Devices

Yichen Gu *

Engineering Department, California State University- Los Angeles, Los Angeles, CA90032, United States

* Corresponding Author Email: ygu7@calstatela.edu

Abstract. Through technological evolution, flexible wearable devices have become an important part of society for health and daily data checks. This article systematically reviews the field: it begins by tracing the historical development of these devices, then investigates the fundamental construction methods and the specific soft, stretchable materials employed in their manufacture. A dedicated section analyzes the specialized power solutions and circuit architectures that enable flexibility and continuous operation. The core advantages of comfort, biocompatibility, and mechanical flexibility are highlighted as critical to user adoption. Ultimately, the research aims to synthesize this knowledge to develop a practical flexible wearable device. The designed device will fulfill specific medical requirements, such as comprehensive health monitoring and tracking vital physiological values for patients managing chronic diseases, offering a seamless and integrated approach to personalized healthcare.

Keywords: Flexible, wearable device, printing.

1. Introduction

In recent years, people who suffer from chronic diseases have been growing, as Figure 1 shows. Because of the characteristic of prevalence, it does not suddenly affect, but chronic diseases change slowly and explode at a certain moment. Also, it is hard to cure, so the one way to save these people is not to give them expansive medicine, more important is keep on watching, keep watching on the specific value of their body. When deterioration of the condition happens, it can be watched easily and give them service they need, that's how wearable device exist, they can help us watch the value for those people who have prevalence, and give the value of Chronic disease visual, gives warning on time.

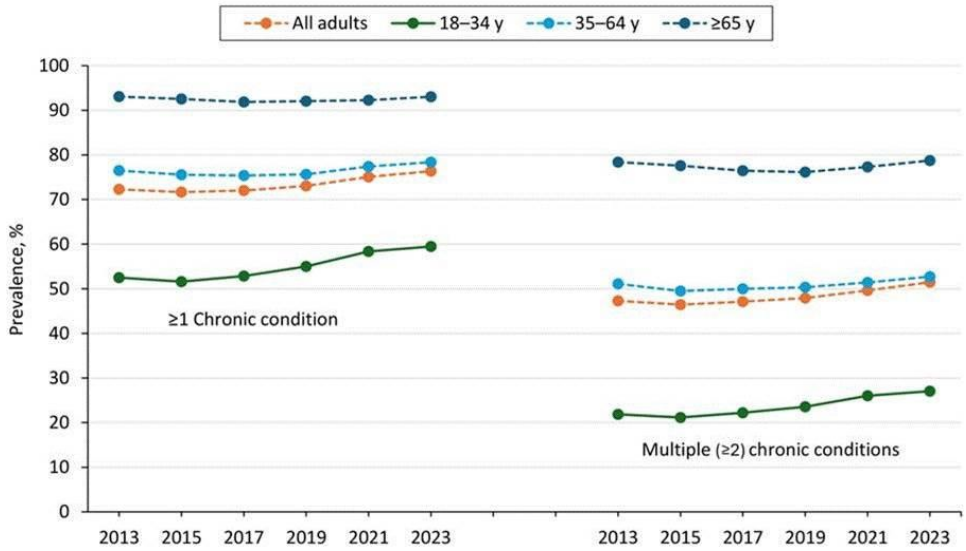

Figure 1. Overall trends in the prevalence among US adults [1]

And based on the requirement for detecting daily health index and visual value related to chronic diseases; flexible wearable devices have grown fast. According to an industry survey report that was

released by the Xinsijie Industrial Research Centre, the global biosensor market will increase approximately 9% per year [2].

Compare to the traditional type of wearable device (like ring on hand), the new type of flexible wearable device is obviously an evolution. This new type of wearable device use material such as polymer for its flexibility, and also gold, graphene for its conductivity, which means its' no longer limit by the physical condition of shape it can be, also it solves many problem of the old type: because its flexibility, it has more surface area, so it can hold more circuit which allow it to have more function, also because of the flexibility, comfortable value is also much getting up, people no longer need to worry about It leaves marks on the hand or stuck on hand in some emergency situation.

Based on the point of flexible wearable devices' reach, this article will go through the history of flexible wearable devices, check their characteristics, and, at the end, see what the possible usage in the future.

2. Develop and material for a flexible wearable device

The earliest wearable device was found in 16 centuries. At that time, Peter Hhnlien invented the first small watch to wear as a necklace. At the Close time periods, Pedometers, which were used to count our steps, were described by Leonardo da Vinci around 1500. In the next step, when time went ot the late 1800s, the first wearable hearing aids were introduced. In 1949, Norman Holter, an American scientist who created the first modern health monitoring device named holster monitor, this device improved the way of monitoring in modern science, and as the prototype of the modern wearable device. There are also many different kinds of wearable devices, like in-ear headphones, glasses, and so on; they become extension of human body, use their function to help people collection information they need more easily.

A flexible wearable device has many convincing parts compared to the traditional one, but there is also a weakness. Because of the physical character, using the flexible material to build the devices is way harder than building the device on a solid material, which means it would have higher requirements on material and precision of the tool. In wearable devices, the characteristics, area, and efficiency are always the primary targets. Flexible devices allow for strength in extension, which means that, based on how much tensile force they can withstand. Flexible devices will have a significantly larger surface area and greater durability. So, in the same-sized device, those that use flexible material could have better performance and sensitivity compared to the traditional kind.

For example, PDMS(Polydimethylsiloxane) is very commonly used flexible substrate, which is our commercial silicone elastomer with good biocompatibility. Its characteristic is that when the temperature is high, PDMS will transfer into a liquid and have viscoelasticity, meaning it will act like a thick liquid, like honey, and back into a solid when the temperature is low. This character brings strong tensile strength but also poor inherent mechanical properties. To overcome this weakness, the most common way is to change its chemical properties, so the graph and equation will change, then, based on the requirement, add or subtract specific elements to reach the requirement for the specific area, like giving PDMS strong adhesion [3]. For an actual example, in oxygen plasma treatment, the oxygen is ionized by the application of high voltage to form ions and free electrons to produce oxygen-containing functional groups [4].

The other part of a flexible wearable device is transferring the signal to the collector; conductivity is also a big part that people would have to focus on. Like liquid metal, it has strong fluidity and high conductivity, which is highly suitable for the requirements of the material for flexible wearable devices. For a new type of liquid metal, a superhydrophobic electronic textile, based on PET/spandex fabric, via three steps: spraying eutectic gallium-indium alloy (EGaIn), electroless silver plating, and FAS-17 modification. It has extremely strong anti-interference ability, able to send the signal even underwater, and this will be an active new solution to the modern flexible wearable devices [5].

3. Production and application of flexible wearable devices

For a flexible wearable device, Conductivity, flexibility, cheaper, and higher efficiency are the ultimate pursuits. To reach this target, one way is to improve the material, and the other way is to change the design of the shape and circuit. Through the evolution of technology, there are many ways to improve it, and the most common way is to print a circuit on a board. Compared to the traditional use razor to create a circuit on a board, this way makes the process faster, cheaper, and easier. For more detailed printing circuits on board, there are three ways that are most commonly used in modern building processes: inkjet printing, screen printing, and 3D printing, as shown in Figure 2.

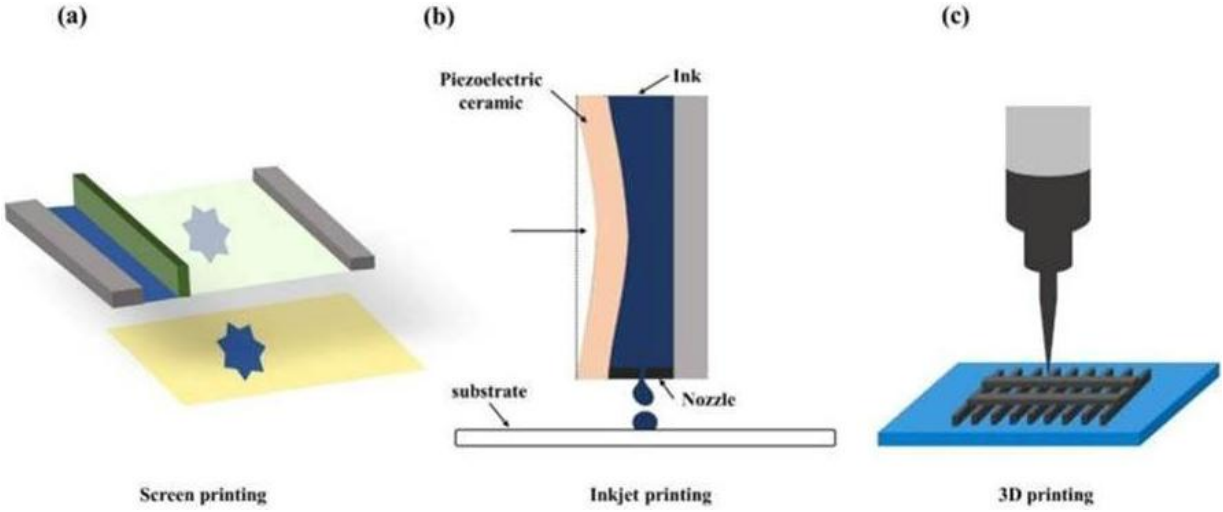

Figure 2. A visual summary of printing technology [1]

Inkjet printing is the most traditional way. The printer that people use in their daily life is the most common one in this way. The printer simply recreates the image through the ink inside, so the printer will spend ink to create that image, and for the flexible device, the printer will print the tattoo sticker and connect to the skin through another product, so the printer can be easily reproduced and easy to get the material through a light way. Like using an automated micro-pen type dispensing device to print on a mould surface. After printing, the mould and printed traces were subjected to a 30-minute sintering process [6].

Screen printing is the earliest way of printing, coming from Chinese block printing. Screen printing works based on building a model with the specific word or shape that is projected, and then comes with ink, pushing the model into the place where the model design is to be, and the printer can easily generate the shape or word people want through this easy and fast process. In the flexible wearable device, this way is good at Adaptability for different situations. Screen printing can be easily fitted with different types of materials, and has high accuracy for the specific shape. For example, a multilayer thin-film turboelectric nano-generator (MT-TENG) that possesses self-generating capabilities can be integrated with microelectronic systems [7].

For the last way, 3D printing builds several models through software on pc (like SolidWorks), then transfers the data to the printer, and then Researchers will see the product on the software being built one layer by layer. This way is the best way to create some parts with the specific requirement, because it isn't limited by the shape and other structure, but the biggest problem is Precision. In 3d printing, there isn't enough Precision to create small parts with specific values, so in using 3d printing, people usually see it in the bigger parts of a flexible wearable device. Recently, polycaprolactone (PCL) macromonomers as 3D printing flexible materials were synthesized by the chemical reaction of PCL10K and isocyanato ethyl methacrylate, printed by commercial stereolithography (SLA) printing to form 3D printed flexible devices. These 3D printed flexible devices were then coated with conductive materials, such as silver nanoparticles or carbon nanotubes (CNTs), for 3D printed flexible electronic devices with shape-memory behavior (as show in figure 3) [8].

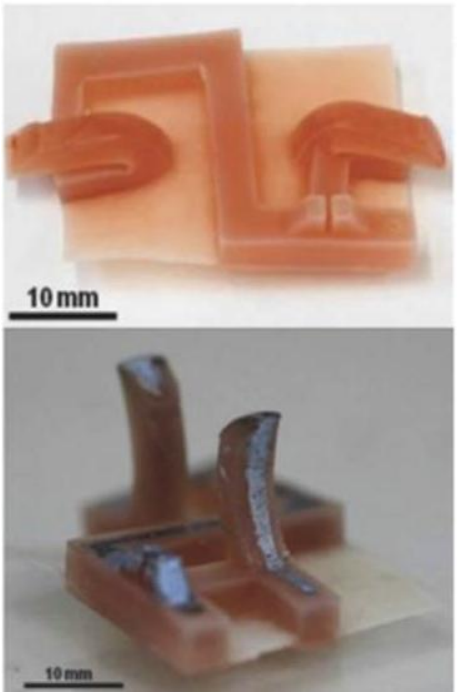

Figure 3. 3D printed with silver nanoparticles [8]

For the usage of flexible wearable devices, there are more ways to be developed, like working as a sensor to instead human skin function, for example: the machine learning engine demonstrated by Pragmatic Semiconductor and ARM (Figure 4). Integrated with flexible gas sensors and a sensing interface, this system can be applied to tasks like malodor classification [9].

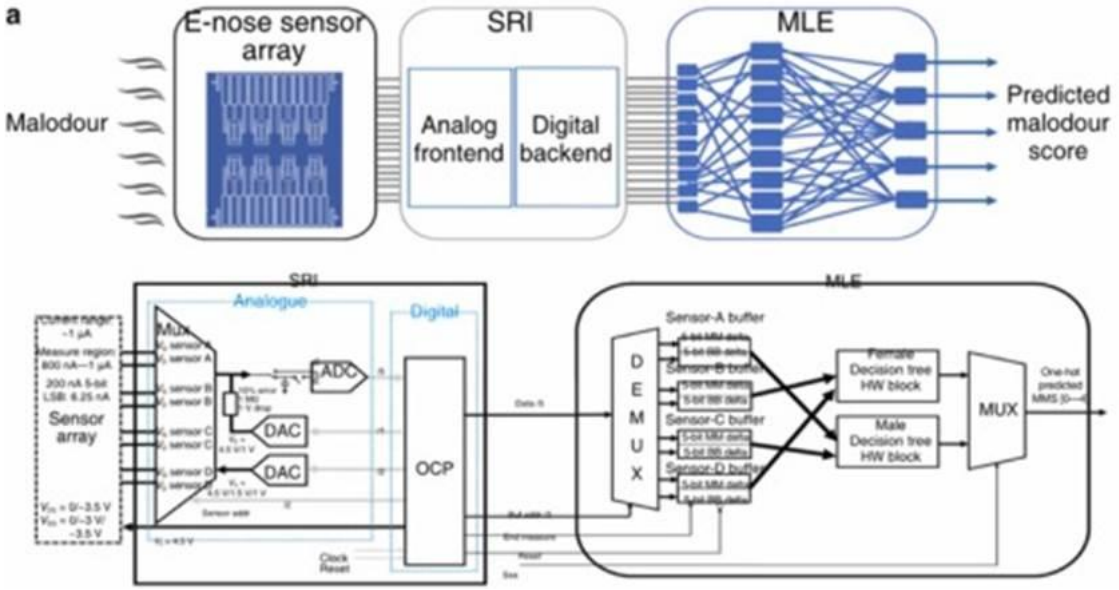

Figure 4. The schematic and function diagram of the flexible machine learning engine for electronic nose application [9]

The flexibility of device would fulfill the requirement of the specific type of illness in the medical field, most commonly use in detecting breath, temperature, blood pressure, and other human body indicators, for example: Fiber Bragg grating (FBG) sensors has characteristics such as simplicity, stretchability, small size, and immunity to electromagnetic interference, created by the 3D printing process, produced by encapsulating a commercial optical fiber embedding an FBG into a silicone substrate [10].

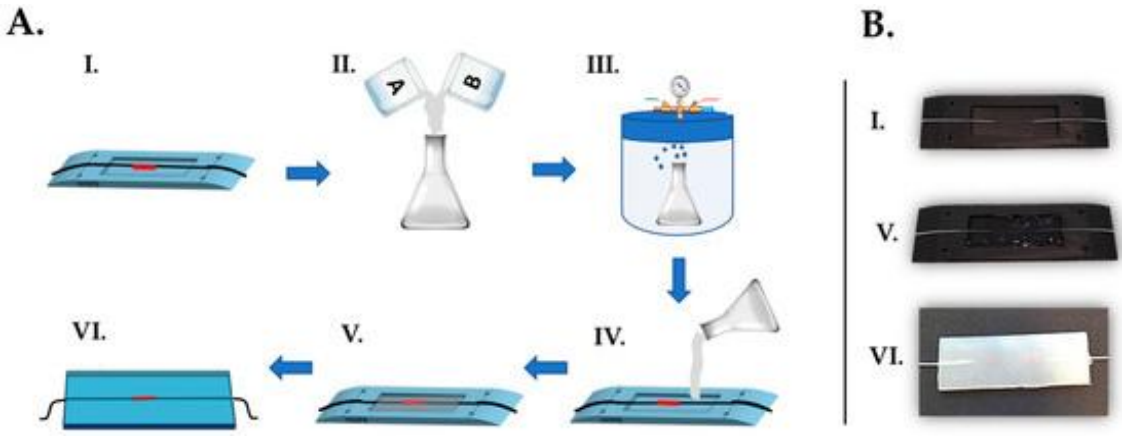

Figure 5. Schematic of the fabrication steps [10]

And for most types of flexible wearable devices, they can usually be separated into 2 parts: biometric signal and physical signal, like to keep watch as temperature monitoring, which require flexibility and constant support of electricity, these are the strengths of a flexible device.

4. Power Supply of Flexible Wearable Devices

The biggest problem with traditional wearable devices is power; most devices cannot maintain stable power support and do not work while they are charging. With the newest technology development, several wireless technologies are able to be applied to those devices, such as NFC (near-field communication), this form would able to transfer both signal and power through a wireless signal, but the weakness is that NFC can't provide high voltage for the device, so NFC only works on low-power devices and is also limited in distance, but recently, there is another way that was able to provide the power, they are the energy provide by other resource, like solar, heat, or the energy from human activity. For example, A novel, all-solid-state, flexible "energy fiber" that integrates the functions of photovoltaic conversion and energy storage has been made based on titania nanotube-modified Ti wire and an aligned MWCNT sheet as two electrodes [11].

5. Conclusion

Flexible wearable devices have the advantage of soft flexibility and comfort compared to traditional wearable devices. Its flexibility allows it to reach the areas that traditional sensors are unable to reach, and also, its soft body gives people a much better wearing experience. This research shows how the flexible wearable device is evolving, starting from the history of flexible wearable devices, then the application of flexible wearable devices and how to build it, at the end how to give power to the flexible device. The article shows the positive side of the research on flexible wearable devices. And it also has a limitation: because of the usage for the flexible wearable device, it has to be comfortable for people to wear and compact for easy to bring out, which limits the function and material highly. So, it is important to seriously pick the function for a specific user profile to save the precious space in a flexible wearable device. If it is able to use the material that has a self-repairing function to create a flexible wearable device, it would become a huge milestone for the development of flexible wearable devices. The other problem is the energy source, which is also due to the limitation of size. A flexible wearable device wouldn't be able to hold a huge battery, so the future function is to do wireless charging or improve the efficiency of both the battery and the flexible wearable device. Although people are looking for better function and more comfortable, flexible wearable devices, but is still has some problems with the specific parts, like a lack of sensitivity and bad connection, which are based on design to have different errors, which would get improved through the technology evolving in the future. At the end, the path of flexible wearable devices is still going, but it requires more people to make it even longer.

References

[1] Watson K B, Wiltz J L, Nhim K, et al. Trends in Multiple Chronic Conditions Among US Adults, By Life Stage, Behavioral Risk Factor Surveillance System, 2013–2023. Preventing Chronic Disease, 2025, 22: E15.

[2] Nan X, Wang X, Kang T, et al. Review of flexible wearable sensor devices for biomedical application. Micromachines, 2022, 13 (9): 1395.

[3] Yuan Y, Liu B, Li H, et al. Flexible wearable sensors in medical monitoring [J]. Biosensors, 2022, 12 (12): 1069.

[4] Neves L B, Afonso I S, Nobrega G, et al. A review of methods to modify the PDMS surface wettability and their applications. Micromachines, 2024, 15 (6): 670.

[5] Zhou J, Zhang Q, Zhang M, et al. Flexible wearable medical devices: from material innovations and data processing to intelligent healthcare applications. Journal of Advanced Research, 2025.

[6] Ali S M, Noghanian S, Khan Z U, et al. Wearable and flexible sensor devices: Recent advances in designs, fabrication methods, and applications. Sensors, 2025, 25 (5): 1377.

[7] Han Y, Cui Y, Liu X, et al. A review of manufacturing methods for flexible devices and energy storage devices. Biosensors, 2023, 13 (9): 896.

[8] Yang H, Leow W R, Chen X. 3D printing of flexible electronic devices. Small Methods, 2018, 2 (1): 1700259.

[9] Liu F, Lorenzelli L. Toward all flexible sensing systems for next-generation wearables. Wearable Electronics, 2024, 1: 137 - 149.

[10] Zaltieri M, Massaroni C, Lo Presti D, et al. A wearable device based on a fiber Bragg grating sensor for low back movements monitoring. Sensors, 2020, 20 (14): 3825.

[11] Zhang Q, Gao X W, Liu X, et al. Flexible wearable energy storage devices: Materials, structures, and applications. Battery Energy, 2024, 3 (2): 20230061.