Circuit Design and System Integration of Glucose Biosensor Based on Piezoelectric Effect

Quanlin Niu *

Concord Bilingual School, Shanghai, 200023, China

* Corresponding Author Email: niuquanlin1015@outlook.com

Abstract. Piezoelectric biosensors have become a new frontier in non-invasive and real-time glucose monitoring, providing an alternative to finger-pricking procedures that are unsatisfactory due to their inconvenience, pain, and costs. This paper presents multiple facets of the working principles, mechanisms of signal transduction, and approaches to system integration. The fundamental operational principles of piezoelectric materials are explained through the constitutive equations that describe the interconversion between mechanical stress and electric displacement. The transduction mechanisms translating surface interactions into electrical signals is facilitated by the Sauerbrey and Kanazawa-Gordon relations, linking mass loading and fluid properties to frequency shifts in quartz crystal microbalances (QCMs). Subsequent works involving surface acoustic wave (SAW) sensors and the use of polyvinylidene fluoride (PVDF) demonstrate the vastness of modes of piezoelectric signal conversion. The paper also addresses the electronic design and whether it improves the stability and amplification defines weak piezoelectric output through the Butterworth-Van Dyke equivalent circuit and charge amplifier. Collective improvements in surface chemistry, selective recognition, and circuit design can enhance sensitive, stable, and portable piezoelectric glucose biosensors. Cumulatively these advances represent the trajectory of practical, wearable, clinical glucose monitoring devices.

Keywords: Piezoelectric effect, glucose detection, system integration.

1. Introduction

Glucose is one of the most vital molecules inside human body it provides energy for cells and helps maintaining metabolic balance. Some serious health problems would arise as the blood glucose level is not regulated properly. Currently, the diabetes is a global prevalent health issue, usually caused by inability to produce insulin or using insulin incorrectly, which leads to dangerous fluctuations of blood glucose. According to the World Health Organization, currently upon four hundred million people live with diabetes. More importantly, this number is sustainably increasing [1]. This kind of daily increment of health burden indicates the high demand for effective and accessible glucose monitoring.

Traditionally, blood glucose monitoring relies on invasive methods such as finger-prick tests, while it is accurate enough, these methods are uncomfortable, inconvenient and unsuitable in long-run use. Although wearable electrochemical sensors and continuous glucose monitors (CGMs) have already promoted the development of monitoring fields, plenty of challenges, including cost, limited accuracy and problems of integration of daily healthcare technologies, remain [2].

Biosensor offers a promising solution. These devices integrate biorecognition and transducer, converting biochemical signals to quantifiable electrical output. Within all the type of biosensors, Piezoelectric biosensor is famous for its high sensitivity, reliability and also the potential of doing real-time, non-invasive detection. The piezoelectric biosensor utilizes the piezoelectric effect to generate electric signals based on the mass or mechanical stress changes on the surface. This kind of mechanism allows biosensors to process label-free, real-time monitoring on those molecules which interact with each other [3].

This essay explores the circuit design and system integration of glucose-detection biosensors based on piezoelectric effect. Additionally, this essay examines the fundamental principles and current advancement of piezoelectric biosensing. And finally analyses how circuit design and system

integration overcome the current limitation. According to this essay, the aim is to highlight the future potential of applications of glucose-detection biosensor in diabetes nursing and healthcare area.

2. Fundamental Principle of Operation

The piezoelectric effect describes the two-way conversion of mechanical energy to electrical energy and, vice versa, in which mechanical stress induces electric charge and an applied electric field generates strain. This effect is standardized in IEEE Standard on Piezoelectricity [4]. The base constitutive equations can be given as follows:

$$S = s^E T + d^T \quad (1)$$

$$D = dT + \varepsilon^T E \quad (2)$$

Where S is the strain, T is the stress, E is the electric field, D is the electric displacement, s^E is the elastic compliances, d refers to piezoelectric constants, and ε^T refers to the dielectric permittivity under constant stress, both equations provide a mathematical overview of the fundamental physical conversion in the piezoelectric effect, that is: the transition from mechanical to electrical quantities in the material.

The first equation Illustrates the converse piezoelectric effect, providing an equation that demonstrates the mechanical strain generated by applying an electric field. The second equation demonstrates the direct piezoelectric effect, where an application of mechanical stress leads to electric displacement. Collectively, they express how energy can flow bidirectionally: transformations of mechanical deformation will provide some sort of electric response, and the application of an electric field can result in motion or other changes. This reciprocity is precisely what allows a piezoelectric element or device to exhibit the behavior of both a sensor and an actuator, which provides the theoretical basis for piezoelectric devices as biosensors.

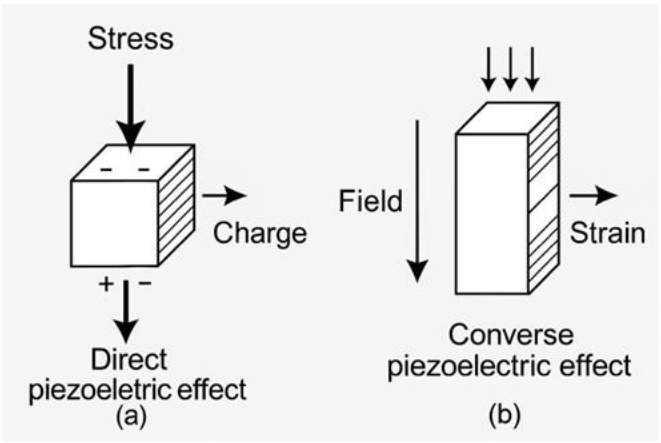

Fig.1 The fundamental mechanism of direct and converse piezoelectric effects (Picture credit: Original)

Fig.1 provides a diagrammatic representation of these two effects, indicating that the direction of electrification or electrical polarization now reverses due to mechanical stress, and the mechanical deformation is proportional to the field applied [4]. This coupling mechanism enables all piezoelectric materials to transform nanoscale mechanical disturbances into detectable electrical signals, making them exceptional biosensing platforms.

For glucose detection, this mechanism underlies all of the design innovations that follow. Any biochemical binding event that occurs on the surface of the piezoelectric material, such as glucose binding, modifies the mechanical boundary conditions which is then represented as a change in electric displacement or potential through the material. Therefore, the material constitutive equations not only describe the material behavior, but also provide the theoretical underpinnings for how biochemical events are measured as electrical signals on piezoelectric biosensors.

The next portion will expand upon these underlying principles by discussing how those surface interactions are quantitatively represented as signals for glucose detection.

3. Translating Surface Interactions into a Signal for Glucose

When glucose molecules attach to a piezoelectric surface, they modify the local mass, viscoelasticity, and charge distributions, all of which cause detectable changes in resonance frequency, phase, or amplitude. This transduction occurs when the coupling defined by the piezoelectric effect takes molecular scale mechanical interactions and relates it to an electrical response.

In QCM systems, mass loading from the rigid mass causes a frequency shift, which is described by the Sauerbrey relation [5]:

$$\Delta f = -\frac{2 f_0^2}{A\sqrt{\rho_q \mu_q}} \Delta m \tag{3}$$

Where f_0 is the fundamental resonance frequency, A is the active crystal area, and ρ_q, μ_q is the density and shear modulus of quartz. This expression establishes a direct and measurable relationship between changes in surface mass (Δm) and changes in electrical frequency (Δf), and shows that mass can be detected by the QCM at the nanogram level by frequency measurement alone. A standard calibration curve illustrating this linear mass-frequency relationship is presented in Figure 2 [6].

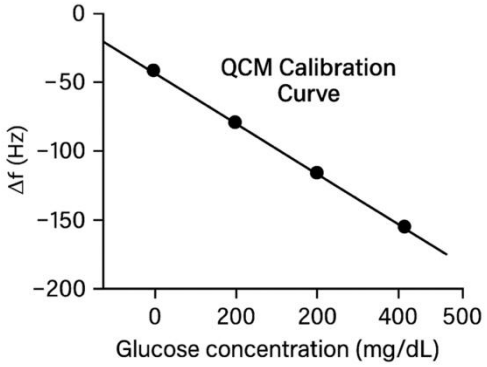

Fig.2 QCM calibration curve which shows relationship between frequency and glucose concentration (Picture credit: Original)

The Sauerbrey model relates primarily to dry, rigid layers. When sensing in liquid there are additional damping factors due to viscosity and density. The theory was later formalized with viscosity and density terms [7]:

$$\Delta f = -f_0^{\frac{3}{2}} \sqrt{\frac{\eta_\ell \rho_\ell}{\pi \rho_q \mu_q}} \tag{4}$$

Where η_l and ρ_l are the viscosity and density of the liquid in contact.

This equation provides another conversion relationship; referring to the fluid's viscous and inertial properties to create a measurable frequency shift and knowledge of how different environmental factors could induce alterations to the sensor's electrical response. An extension of the QCM to liquid-phase biochemical systems could allow real-time detection of molecular binding and associated reaction kinetics, extending the application of the QCM from thin solid films into the liquid phase.

While other piezoelectric devices operate on the same principle of interconversion but with slightly different parameters of interest. Surface acoustic wave (SAW) sensors operate by converting mass loading on their surface into acoustic signal shifts. With advances in nanomaterial integration, modern SAW devices demonstrate improved sensitivity and liquid compatibility for biological detection, including glucose monitoring [8]. Alternatively, flexible PVDF films generate electrical charge induced molecularly induced strain [9, 10]. All variations reflecting piezoelectric biosensors

serve as conversion of physical effects occurring at the surface, whether mass, viscosity, or deformation, to an electrical signal that can be measured.

To accurately investigate the measurable electrical response specific to glucose, selectivity is essential. For example, various biological samples contain many different saccharides, yet only glucose should evoke a measurable signal. There are many methods commonly used to increase signals measurement selectivity, although the preferred method is through glucose oxidase (GOx) immobilisation. GOx catalyses β-D-glucose oxidation as it provides molecular specificity, predictable repeatability, and reduced interference [6]. The limitations associated with the most common configuration is the GOx activity will decrease over time; oxidation cannot be sustained indefinitely. Therefore, the stability of GOx was a main limitation, and therefore, an enzyme-free ConA–dextran system was developed, that exhibited long-term stability as a modified approach to selective glucose detection [11]. Additional non-enzymatic methods to improve measurement selectivity and stability, such as boronic acid and molecularly imprinted polymers (MIPs), have improved the specificity to glucose, and demonstrate many of the biosensing methods available [12]. It should be noted the Sauerbrey and Kanazawa–Gordon equations in conjunction and separately offer a theoretical approach to how mechanical and environmental interactions are mathematically converted to a measurable frequency. This feature is the fundamental biophysical principle for common piezoelectric biosensor's signal transduction mechanisms.

Under constant experimental conditions and subsequent sensor standardization, consideration can be given to develop advances in material composition or designed surface chemistry to improve selectivity, stability, and accuracy measurements, such as to glucose biosensing. The following section will discuss how the sensor's electrical response is processed further, and integrated within electronic hardware system.

4. Electronics And System Integration

Piezoelectric sensors produce signals of relatively weak electrical energy that require processing, amplifying, and transmission, in order to be usable as analytical data. As such, electronics and integrated systems represent the design of circuits and components, which will convert, condition, and manage the signals in real time. Proper integration is critical to quantitatively convert the mechanical to electrical conversion process occurring at the sensing surface to digital information that can be displayed or communicated via radio waves.

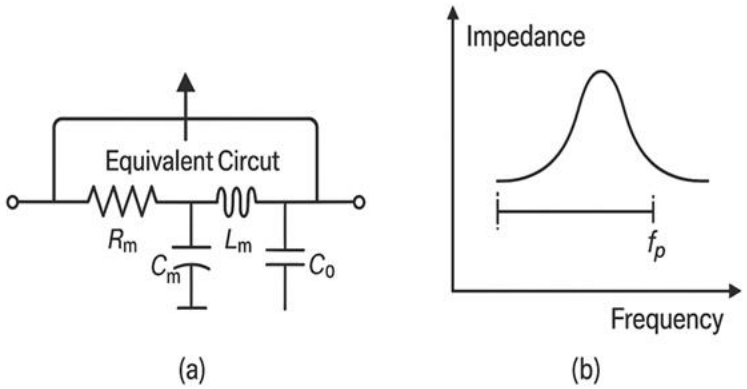

Fig.3 (a) BVD equivalent circuit (b) Resonance curve (Picture credit: Original)

In order to understand how the conversion from mechanical to the electrical process occurs, the electrical behaviour of a quartz resonator is modelled by the Butterworth–Van Dyke (BVD) equivalent circuit (Fig.3a). The BVD consists of a motional branch defined by R_m, L_m, and C_m to represent mechanical vibration. The motional branch in parallel with a static capacitance C_0

associated with the capacitance of the crystal electrodes. The characteristic frequencies of the resonator are:

$$f_s = \frac{1}{2\pi\sqrt{L_m C_m}} \tag{5}$$

$$f_p \approx \frac{1}{2\pi}\sqrt{\frac{C_m + C_0}{L_m C_m C_0}} \tag{6}$$

The two equations present an overview of how the mechanical resonance of the crystal is converted into its electrical impedance response: the lower frequency f_s is associated with series resonance (maximum current flow), and the frequency f_p is parallel resonance (minimum current). Fig.3b is related to these resonance points, and when surface loading or biochemical binding forces the impedance response, the resultant voltage profile becomes the measurable signal output.

For polymer-based sensors such as PVDF, the generated charge must be converted into a voltage to enable further processing. A charge amplifier, presented Fig.4 presents an overview of the operational behavior and can be expressed as [13, 14]:

$$V_{out} = \frac{Q}{C_f} \tag{7}$$

where Q is sensor charge, and C_f, is the feedback capacitance. The above equation presents how the small charge output produced by the sensor is measured in voltage. The system provides stable amplification, which is independent from any of the sensor capacitance. The feedback resistor R_f is added for two reasons: preventing buildup of charge and limiting the frequencies to be monitored to a controlled range. Using R_f defines the low frequency cutoff:

$$f_{low} = \frac{1}{2\pi R_f C_f} \tag{8}$$

This relationship takes component values of the circuit and converts it to the frequency response of the system and therefore identifies how slowly varying signals are filtered or stabilized. Relative to a system using voltage or current amplifiers, the charge amplifier has lower noise and improved stability when using high-impedance piezoelectric sensors.

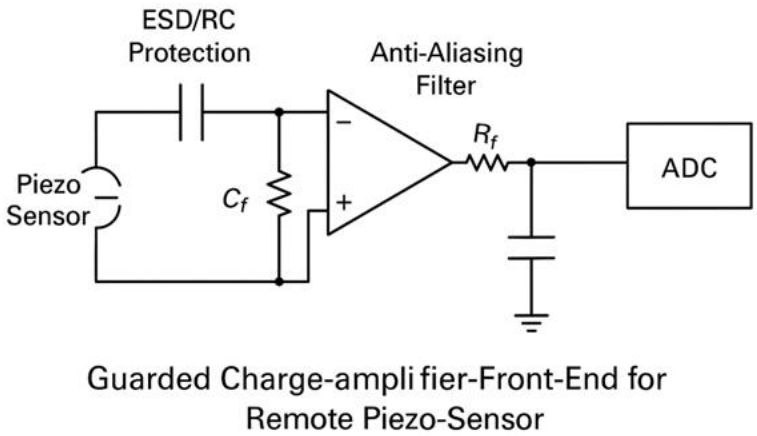

Fig.4 Charge amplifier circuit for PVDF sensor (Picture credit: Original)

Modern integration goes beyond just the amplifier. A microcontroller digitizes the analog signal through an ADC and performs processing using embedded algorithms. Additionally, a power regulation system provides constant voltage to stabilize the signal. Finally, the processed information is transmitted wirelessly through Bluetooth Low Energy (BLE) or NFC modules by a battery the size of a coin that can be recharged. Collectively these subsystems convert the analog electrical signal into digital information capable of being wirelessly transmitted to be used for continuous monitoring of glucose.

The model and equations in this section essentially explain how mechanical resonance and generated charge are converted to electrical impedance and voltage outputs. Once the biosensors are fully integrated into the systems of amplification, filtering, digitizing, and communication piezoelectric biosensors evolve from simple transducer technologies into complete real-time diagnostic systems.

5. Conclusion

While piezoelectric biosensors have impressive sensitivity and high potential in the real-time detection of glucose, many barriers exist for the technologies to translate to clinical settings in a timely manner. Quartz-based piezoelectric devices, such as quartz crystal microbalances (QCM), do provide sensitive mass measurements, however, the influence of the viscous and density characteristics of a fluid can affect their properties, and thus rapid thermal control and a reference channel are required for accurate detection. Furthermore, the assumption of rigid films fails in viscoelastic layers, augmenting the need for more advanced models such as QCM-D. Similarly, although enzyme-based recognition strategies work in a specific manner, they are limited by the gradual loss of activity and short-term stability; again, overcoming many of the technical and biochemical features described previously must be consider before any reliable clinical deployment of these devices could happen.

Despite ongoing technical barriers, progress has still pointed to promising ways forward; first, recognition strategies based on boronic acid and lectin-based chemistry may provide increased stability than enzyme-based strategies; second, the use of surface acoustic wave (SAW) biosensors with incorporated microfluidics, reducing the volume and time required to run the assays; and lastly, piezo combine film technology (PVDF) are low-cost and offer a level of flexibility for wearable patches for desired continuous use. Furthermore, rising advances in low-noise electronics and significant miniaturization of the entire device continues to ease the transition of technology closer to the user-friendly biosensors we would like to see. Importantly, each of these advances directly resonate with the motivation presented at the beginning of this essay; addressing the societal need for stable, accurate and easy-to-access glucose monitoring technologies to combat the global burden of diabetes.

In closing then, researchers are optimistic despite the technical issues; taking into account advances made in surface chemistry, transducer design, and the integration of systems, builds a sense of optimism for piezoelectric-based biosensors. With concerted research efforts made in this field, the aforementioned platforms may be launched to either complement or compete with current glucose-monitoring technologies, limiting the burden of diabetic challenges associated with the use of non-continuous, invasive, and inaccurate methods of glucose monitoring.

References

[1] Gregg E W, Buckley J, Ali M K, et al. Improving health outcomes of people with diabetes: target setting for the WHO Global Diabetes Compact. the lancet, 2023, 401(10384): 1302-1312.

[2] Sergel-Stringer O T, Wheeler B J, Styles S E, et al. Acceptability and experiences of real-time continuous glucose monitoring in adults with type 2 diabetes using insulin: a qualitative study. Journal of Diabetes & Metabolic Disorders, 2024, 23(1): 1163-1171.

[3] Skládal P. Piezoelectric biosensors: shedding light on principles and applications. Microchimica Acta, 2024, 191(4): 184.

[4] Aabid A, Raheman M A, Ibrahim Y E, et al. A systematic review of piezoelectric materials and energy harvesters for industrial applications. Sensors, 2021, 21(12): 4145.

[5] Sauerbrey G. Verwendung von Schwingquarzen zur Wägung dünner Schichten und zur Mikrowägung. Zeitschrift für physik, 1959, 155(2): 206-222.

[6] Jara Fornerod M J, Alvarez-Fernandez A, Michalska M, et al. Glucose oxidase loading in ordered porous aluminosilicates: exploring the potential of surface modification for electrochemical glucose sensing[J]. Chemistry of Materials, 2023, 35(18): 7577-7587.

[7] Kanazawa K K, Gordon II J G. The oscillation frequency of a quartz resonator in contact with liquid[J]. Analytica Chimica Acta, 1985, 175: 99-105.

[8] Zhang H, Chen P, Yang L, et al. Fabrication of Surface Acoustic Wave Biosensors Using Nanomaterials for Biological Monitoring[J]. Nanomanufacturing, 2024, 4(3): 159.

[9] Ruan L, Yao X, Chang Y, et al. Properties and applications of the β phase poly (vinylidene fluoride) [J]. Polymers, 2018, 10(3): 228.

[10] Meng N, Ren X, Santagiuliana G, et al. Ultrahigh β-phase content poly (vinylidene fluoride) with relaxor-like ferroelectricity for high energy density capacitors[J]. Nature communications, 2019, 10(1): 4535.

[11] Tang D, et al. Enzyme-free QCM biosensor for glucose via glucose/dextran displacement on a ConA platform[J]. Biosensors and Bioelectronics, 2011, 26(5): 2160-2165.

[12] Hassan M H, Vyas C, Grieve B, et al. Recent advances in enzymatic and non-enzymatic electrochemical glucose sensing[J]. Sensors, 2021, 21(14): 4672.

[13] Liao J, Li P, Miao J, et al. Low Noise Feed-Through Compensation Circuit Design for Resonant MEMS Pressure Sensor[J]. Micromachines, 2025, 16(4): 400.

[14] Fort A, Landi E, Moretti R, et al. Influence of front-end electronics on metrological performance of QCM systems[J]. Sensors, 2024, 24(11): 3401.